EVIDENCE ON THE DEVELOPMENTAL AND REPRODUCTIVE TOXICITY OF

# Deltamethrin

October 2012

Reproductive and Cancer Hazard Assessment Branch
Office of Environmental Health Hazard Assessment
California Environmental Protection Agency

## Authors and Reviewers

The Office of Environmental Health Hazard Assessment's Reproductive and Cancer Hazard Assessment Section prepared this document.


### Primary Author

Poorni Iyer, DVM, Ph.D., DABT
Staff Toxicologist
Reproductive Toxicology and Epidemiology Section
Reproductive and Cancer Hazard Assessment Branch

### Contributing Authors

Ling-Hong Li, Ph.D.
Staff Toxicologist

K. Lily Wu, Ph.D.
Staff Toxicologist

Allegra N. Kim, Ph.D.
Research Scientist III
Reproductive Toxicology and Epidemiology Section
Reproductive and Cancer Hazard Assessment Branch

### OEHHA Reviewers

Allan Hirsch
Chief Deputy Director

Lauren Zeise, Ph.D.
Deputy Director for Scientific Affairs

James M. Donald, Ph.D.
Chief, Reproductive Toxicology and Epidemiology Section
Reproductive and Cancer Hazard Assessment Branch

## Preface

Proposition 65[1] requires the publication of a list of chemicals "known to the state" to cause cancer or reproductive toxicity. It specifies that "a chemical is known to the state to cause reproductive toxicity … if in the opinion of the state's qualified experts the chemical has been clearly shown through scientifically valid testing according to generally accepted principles to cause reproductive toxicity ...." The "state's qualified experts" regarding findings of reproductive toxicity are the members of the Developmental and Reproductive Toxicant Identification Committee (DART IC) of the Office of Environmental Health Hazard Assessment (OEHHA) Science Advisory Board[2]. OEHHA, a department within the California Environmental Protection Agency, is the lead agency for implementing Proposition 65.

After consultation with the DART IC, OEHHA selected deltamethrin as a chemical for consideration for listing by the DART IC. The public was then given the opportunity to submit information relevant to the assessment of the evidence on the reproductive toxicity of deltamethrin. Two comments were received.

OEHHA developed this document to provide the DART IC with comprehensive information on the reproductive toxicity of deltamethrin for use in its deliberations on whether or not the chemical should be listed under Proposition 65.

[1] The Safe Drinking Water and Toxic Enforcement Act of 1986 (California Health and Safety Code section 25249.5 *et seq*.)
[2] Title 27 Cal. Code of Regs. Section 25302

## Table of Contents

**Authors and Reviewers** ..... **2**

**Preface** ..... **3**

**Table of Contents** ..... **4**

**A. Executive Summary** ..... **5**

**B. Introduction** ..... **8**

*B.1. Chemical Structure and Main Physical Characteristics* ..... *8*

*B.2. Use and Exposure Information* ..... *10*

*B.3. Pharmacokinetics and Metabolism* ..... *11*

*B.4. Non-DART Toxicities* ..... *13*

**C. Male Reproductive Toxicity** ..... **17**

*C.1. Human Male Reproductive Toxicity Studies* ..... *17*

*C.2. Animal Male Reproductive Toxicity Studies* ..... *17*

*C.3. Integrative Evaluation of Male Reproductive Toxicity* ..... *25*

**D. Female Reproductive Toxicity** ..... **27**

*D.1. Human Female Reproductive Toxicity Studies* ..... *27*

*D.2. Animal Female Reproductive Toxicity Studies* ..... *27*

*D.3. Integrative Evaluation* ..... *28*

**E. Developmental Toxicity** ..... **29**

*E.1. Human Studies* ..... *29*

*E.2. Animal Studies* ..... *29*

*E.3. Summary of Developmental Effects Seen in Animal Studies* ..... *36*

*E.4. Integrative Evaluation of Developmental Toxicity of Deltamethrin* ..... *39*

**F. References** ..... **41**

**Appendix** ..... **47**

## A. Executive Summary

Deltamethrin is a synthetic pyrethroid insecticide that is largely used in structural pest control. It is also used to control numerous insect pests of field crops, potted plants, and ornamentals. Formulations of deltamethrin include emulsifiable concentrates, wettable powders, and flowable formulations and granules. It is the primary metabolite of another pyrethroid, tralomethrin and environmental fate studies indicate that tralomethrin undergoes rapid and essentially complete debromination to form deltamethrin.

There are no studies of the developmental or female or male reproductive toxicity of deltamethrin in humans; hence, the evidence for all three endpoints comes from data on effects seen in animal studies.

*Male Reproductive Toxicity*

Several studies examining the effect of deltamethrin exposure on the male reproductive system are available. These include studies in laboratory species such as the mouse, rat and rabbit, as well some done *in vitro*. Adverse effects noted in the studies are outlined below.

- Decrease in live sperm and plasma testosterone levels:
    - In a rat study, oral administration of deltamethrin for 65 consecutive days (to cover a complete spermatogenic cycle) decreased sperm concentration and the conception rate in non-treated females that were mated with treated males. The decrease in live sperm and plasma testosterone levels continued and was noted 21 days after administration of the chemical was stopped. Degenerative changes in testicular and accessory gland structures were also noted.
    - Subcutaneous exposure to deltamethrin to rats at doses as low as 0.003 mg/kg-day for a period of 45 or 60 days produced an arrest of spermatogenesis and a significant decrease ($p \leq 0.05$) in plasma follicle stimulating hormone concentration compared to controls. Effects were not observed after 30 days of exposure.

- Testicular effects and reproductive behavior:
    - Intraperitoneal injection of deltamethrin to male rats at 1 mg/kg was shown to induce testicular apoptosis.
    - *In utero* and lactational exposure of rats to 4.0 mg/kg deltamethrin via the oral route induced subtle changes in the reproductive behavior and physiology of male offspring (reduction in the number of animals with ejaculate) along with a decrease in testicular and epididymal absolute weights and the diameter of seminiferous tubules.

- In a two-generation reproduction study in rats, the absolute mean weights of the epididymides and testes of the F1 males exposed to 320 ppm deltamethrin in diet were significantly less than those of the controls. There was also a significant decrease in the ratio of the weights of these organs (epididymides and testes) to brain weight. Increased mortality was noted in animals at this dose-level.

- Sperm motility and abnormalities:

  - Oral administration at 5 mg/kg-day of deltamethrin resulted in significantly decreased sperm count, motility and viability and a significantly increased percentage of morphologically-abnormal spermatozoa compared with the controls in mice. Deltamethrin and dimethoate administered together had similar effects.
  - Rabbits exposed orally to deltamethrin exhibited decreased ejaculate volume and sperm concentration and an increase in percentage of dead spermatozoa.

*Female Reproductive Toxicity*

Three studies reported adverse female reproductive effects.

- Uterine and Pituitary weights:
  - In a two-generation rat reproductive study, parental females exposed to 320 ppm in diet demonstrated a decrease in the absolute mean weight for the non-gravid uterus ($p<0.01$) and the absolute mean pituitary weights ($p<0.05$) compared to those of the control group. Increased mortality was noted in animals at this dose-level.

- Implantation and fertility:
  - Blastocyst-endometrium interactions in rats were examined subsequent to deltamethrin exposure and reduction in the number of implantation sites and alterations in histopathology of the sites were noted.
  - In another study in rats, a smaller number of pups and reduced fertility was noted subsequent to deltamethrin exposure.

*Developmental Toxicity*

Several studies examining the effect of *in utero* deltamethrin exposure in laboratory animal species are available.

- Developmental neurotoxicity:
    - A developmental neurotoxicity study in rats demonstrated adverse effects such as reduced fixed female brain weight and increased resistance at removal with vocalization in males exposed during the prenatal and postnatal periods to 16.1 mg/kg-day.
    - Maternal exposure to 0.08 mg/kg-day during the organogenesis period in rats resulted in decreased locomotion frequency and increased immobility in the open field in male offspring.
    - Alterations in biochemical and behavioral parameters as well as effects on the ontogeny of specific enzymes noted in other studies in rats suggest that prenatal exposure to a low dose of deltamethrin may cause alterations in offspring motor and dopaminergic activity systems as well as perturbations in biochemical parameters.

- Offspring viability, growth and malformations:
    - One study in rats and one study in rabbits reported no adverse developmental effects.
    - Oral maternal exposure to 0.08 mg/kg-day during the organogenesis period resulted in a delay in the day of eyes opening for male and early vaginal channel opening in female offspring in rats.
    - Mean age of attainment of preputial separation of male pups was delayed at maternal exposure to 16.1 mg/kg-day in the developmental neurotoxicity study in rats where the parameter was evaluated.
    - A study in rats reported a decrease in uterine weight, an increase in the percentage of resorbed fetuses as well as malformed fetuses in a dose-dependent manner (at 13.38 and 26.75 mg/kg-day) along with a decrease in average body weight of the fetuses and incomplete ossification. A decrease in maternal body weight gain during gestation with signs of lethargy was also reported.

## B. Introduction

This document reviews the reproductive toxicity of deltamethrin. It begins with a brief discussion, in this section, of the physical characteristics, exposure and uses of deltamethrin. This is followed by sections on each of the major endpoints – male reproductive, female reproductive, and developmental toxicity. No data on human exposures to deltamethrin and reproductive or developmental outcomes were identified. Thus the evidence on these toxicities comes from data on effects seen in animal studies. The description of the *in vivo* animal studies is followed by a discussion of other data relevant to these toxicities, such as in vitro data. The discussion of each endpoint concludes with an integrative evaluation of the animal and other relevant data. Further details of the animal studies presented are provided in the Appendix.

### B.1. Chemical Structure and Main Physical Characteristics

Deltamethrin is a synthetic pyrethroid insecticide used to control numerous insect pests of field crops, potted plants, and ornamentals. Pyrethroids are synthetic chemicals modeled after the pyrethrin components of pyrethrum, a naturally occurring chemical found in certain chrysanthemum flowers (National Pesticide Information Center, 2012). The susceptibility of insects to deltamethrin is dependent on a variety of factors and can vary according to the environmental conditions. Formulations of deltamethrin include emulsifiable concentrates, wettable powders, and flowable formulations and granules (EXTOXNET, 1995).

Deltamethrin is the common name for (1R,3S)[α-cyano(3-phenoxyphenyl)methyl]-3-(2,2-dibromo-ethenyl)-2,2-dimethylcyclopropanecarboxylate (California Department of Pesticide Regulation, 2000). The Chemical Abstracts Service (CAS) Registry Number is 52918-63-5. Trade names for products containing deltamethrin include Butoflin™, Butox™, Decis™, K-Othrin™, K-Othrine™ Dust, and Striker™ IEC insecticide (California Department of Pesticide Regulation, 2000). The chemical structure of deltamethrin is shown in Figure 1.

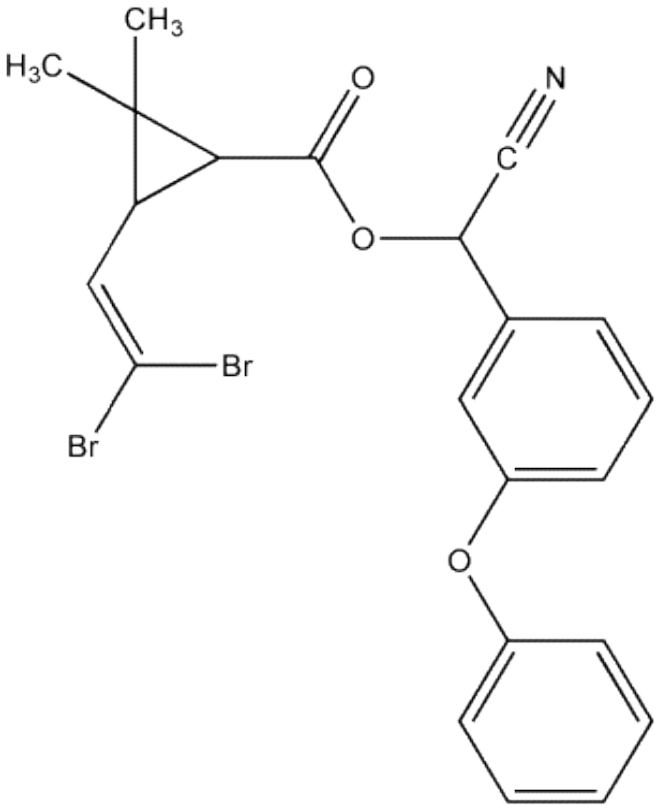


**Figure 1.** Molecular Structure of Deltamethrin (Kegley, 2010).

Deltamethrin is considered stable when exposed to air and sunlight, and is more stable in acid than alkaline media. Deltamethrin is noncorrosive to metals (EXTOXNET, 1995). The physico-chemical properties are summarized below in Table 1. The information was obtained from either the California Department of Pesticide Regulation or the National Pesticide Information Center. (National Pesticide Information Center, 2012).

**Table 1. Chemo-physical properties of deltamethrin**

| | |
|---|---|
| **Appearance:** | White to slightly beige crystalline powder (California Department of Pesticide Regulation, 2000). |
| **Molecular weight:** | 505.24 |
| **Molecular formula:** | $C_{22}H_{19}Br_2NO_3$. |
| **Solubility in water:** | Deltamethrin is almost insoluble with a 0.002 mg/l solubility at 20 degrees C |
| **Solubility in other solvents:** | Soluble in acetone, dimethylformamide, dioxane, ethyl acetate, and toluene (California Department of Pesticide Regulation, 2000). |
| **Octanol-Water Partition Coefficient (log $K_{OW}$):** | 6.1 (National Pesticide Information Center, 2012) |
| **Melting point:** | 98-101 degrees C |
| **Boiling point:** | Decomposes on distillation |
| **Vapor pressure:** | 1.5 to 2 x $10^{-8}$ mm Hg at 25 degrees C. |
| **Henry's Law constant:** | 5.0 x $10^{-5}$ to 1.2 x $10^{-4}$ atm·$m^3$/mol at 25 °C, depending on the technique used (National Pesticide Information Center, 2012). |

## B.2. Use and Exposure Information

Exposures result from application of the pesticides deltamethrin and tralomethrin. Tralomethrin is unstable under either an aerobic or anaerobic condition, and rapidly undergoes debromination to form deltamethrin (California Department of Pesticide Regulation, 2000).

Uses for individual deltamethrin products vary widely. Deltamethrin has been registered for a number of non-agricultural uses on areas such as golf courses, ornamental gardens, lawns, outdoor perimeter treatments, indoors as spot and crack and crevice treatments, and pet flea and tick collars. Deltamethrin is registered for use on various crops including cotton, corn, cereals, soybeans, and vegetables for pests such as mites, ants, weevils, and beetles (ATSDR, 2003). It

is also registered for use in residential and industrial applications for the control of cockroaches, pests of stored commodities, and other nuisance or destructive insects (U.S. EPA, 2010).

Formulations of deltamethrin include emulsifiable concentrates, wettable powders, and flowable formulations and granules (EXTOXNET, 1995).

Table 2 summarizes the use trend of deltamethrin in agriculture and for structural pest control in California from 1998-2010. The data indicate that deltamethrin is largely used in structural pest control, with an 80-fold increase from 1998-2003; however, from 2003 to 2010 there has been a decline in these uses of deltamethrin. This decrease in use is noted in the table below. Other agricultural uses not captured in this table include the treatment of non-food/feed areas of food/feed processing plants, granaries, and ornamental plants (California Department of Pesticide Regulation, 2000).

**Table 2. Deltamethrin use for agricultural and structural pest control - Trend in California, 1998-2010**

| | POUNDS APPLIED | | | | | | |
|---|---|---|---|---|---|---|---|
| | 1998 | 1999 | 2000 | 2001 | 2002 | 2003 | 2010 |
| **STRUCTURAL PEST CONTROL** | 212 | 3,305 | 10,606 | 17,107 | 12,458 | 17,690 | 5,123 |
| **Chemical Total** | 214 | 3,343 | 10,910 | 17,721 | 13,001 | 18,301 | 5,769 |

Pesticide Use Report, California Department of Pesticide Regulation Online database.

In soil, degradation occurs within 1-2 weeks. Deltamethrin in pond water was rapidly adsorbed, mostly by sediment, in addition to uptake by plants and evaporation into the air (EXTOXNET, 1995). About 10 days after use, there are no deltamethrin residues observed on plants.

## B.3. Pharmacokinetics and Metabolism

### B.3.1. Absorption

Deltamethrin is considered to be readily absorbed when administered orally and the carrier or solvent can affect the rate of absorption (National Pesticide Information Center, 2012). Absorption in the gastrointestinal tract and respiratory tract is higher compared to absorption through the skin. Oral absorption in humans is thought to be at least 50% (California Department of Pesticide Regulation, 2000).

In the Sprague-Dawley rat, 58.4% absorption of an oral dose was noted (Gammon et al., 2012). Deltamethrin reached peak plasma concentrations in rats at 2.1 hours after a single oral dose. Deltamethrin was absorbed by rats after they were fed plant material containing bound residues of the chemical (National Pesticide Information Center, 2012).

Rats absorbed 3.6% of the deltamethrin applied to their skin, which was then excreted within 24 hours. Since human skin is less permeable than rat skin, the absorption of deltamethrin through human skin is expected to be relatively weak. Deltamethrin was poorly absorbed from the gastrointestinal tract of lactating cows fed 10 mg/kg for three days (National Pesticide Information Center, 2012).

### B.3.2. Distribution

Deltamethrin is distributed to nerve tissues and all regions of the brain tested (Gammon et al., 2012). Studies with rats observed that orally administered deltamethrin was recovered in fat at slightly higher concentrations compared to other tissues. In rats, deltamethrin had a half-life in blood of 5.5 hours. One study found little accumulation in the major edible tissues when lactating cows were fed deltamethrin for three days at a rate of 10 mg/kg/day (National Pesticide Information Center, 2012).

### B.3.3. Metabolism and Elimination

Elimination of deltamethrin in the rat occurs within 2-4 days of administration. Deltamethrin has a half-life in the rat brain of 1 to 2 days, but it is more persistent in body fat, with a half-life of 5 days (EXTOXNET, 1995). Metabolism of deltamethrin in rats involves rapid ester cleavage and hydroxylation. Of the five major phase 1 metabolites of deltamethrin, the 4'-OH-phenoxy benzoic acid acid is very important as it is a common urinary metabolite of several pyrethroids and is often used as a general biomarker for pyrethroid exposure by the Centers for Disease Control and Prevention in the National Health and Nutrition Examination Survey study (Ahn et al., 2011). Metabolites of the cyano substituent of deltamethrin are eliminated more slowly, and tissue levels remain relatively high, especially in the skin and stomach.

A human metabolism study of deltamethrin was carried out in three volunteers. A single oral dose of 3 mg of $^{14}$C-deltamethrin per person was given. The $^{14}$C was more rapidly excreted into urine (51-59%) than into feces (10-26%), total excretion of $^{14}$C being 64-77% of the dose for 96 hr (Gammon et al., 2012).

The U.S. Environmental Protection Agency (U.S. EPA) has developed a deltamethrin physiologically-based pharmacokinetic (PBPK) model to evaluate differences in tissue dosimetry for rats ranging from postnatal day (PND) 10 to PND 90 based on available time course data of doses that ranged from 0.4 to 10 mg/kg (Tornero-Velez et al., 2010). This model predicts an approximately 3-fold

increase in deltamethrin brain concentration in juvenile rats compared to adults. A diagram of the model is presented below as Figure 2.

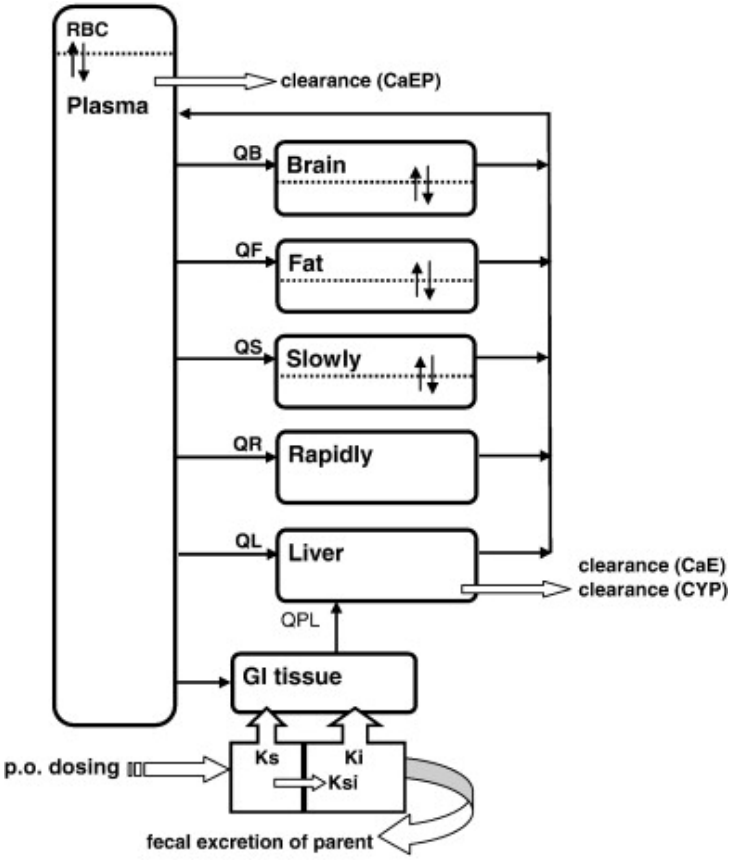


**Figure 2.** Schematic of the 7-compartment PBPK model of deltamethrin for immature rats (Tornero-Velez et al., 2010).

## B.4. Non-DART Toxicities

Pyrethroids are neurotoxicants. The mechanism of action of pyrethroids, including deltamethrin, is the same for target and non-target organisms. In general, pyrethroids interfere with normal production and conduction of nerve signals in the nervous system and act on nerve membranes by delaying the closing of the activation gate for the sodium ion channel. They are less toxic to mammals compared to insects due to mammals' higher body temperature, larger body size, and decreased sensitivity of the ion channel sites (Bradberry et al., 2005; Leake et al., 1985; Ray et al., 2006). Researchers distinguish between two classes of pyrethroids, namely Type I and Type II, based on electrophysiological studies with nerves and symptoms of toxicity. Deltamethrin is a Type II pyrethroid. Type II pyrethroids cause a dramatic prolongation and enhancement of sodium tail currents in voltage-clamped nerve axons (Gammon et al., 2012) and have an α-cyano group that induces "long-lasting" inhibition of

the sodium channel activation gate. This results in prolonged permeability of the nerve to sodium and produces a series of repetitive nerve signals in sensory organs, sensory nerves, and muscles (National Pesticide Information Center, 2012). Researchers observed that deltamethrin and other Type II pyrethroids may also affect ion channels other than sodium channels, possibly due to their phosphorylation state (Burr et al., 2004; Ray et al., 2006).

### B.4.1. Acute Toxicity

#### B.4.1.1. Human Studies

Paresthesia was the most commonly reported symptom from dermal exposure in occupational studies involving pyrethroids. Skin sensations were characterized as tingling, itching, burning, and numbness of the skin after dermal exposure. The paresthesia was reported to be transient and reversible in a period of hours, sometimes lasting up to 48 hours (Ray et al., 2006; Soderlund et al., 2002). Paresthesia is considered to occur only at the site of dermal exposure and is not associated with systemic intoxication (Soderlund et al., 2002). The California Pesticide Illness Query (CalPIQ) database revealed 41 incidents of illness reports that had “probable” to “possible” association with the use of deltamethrin between the years 2000-2009. This included both agricultural and non-agricultural uses of the pesticide (California Department of Pesticide Regulation, 2012).

#### B.4.1.2. Animal Studies

The signs of toxicity typically associated with deltamethrin are typical of Type II pyrethroids and include characteristic effects of choreoathetosis (sinuous writhing) and salivation (Bradberry et al., 2005). In rats, this presents as pawing and burrowing behavior followed by salivation and tremors, progressing to choreoathetosis and clonic seizures may occur in the final stage. Summarizing the overall effects of deltamethrin, the National Pesticide Information Center reports that rats exhibited motor incoordination, salivation, respiratory defects, spasms involving the limbs and tail, and clonic seizures when administered deltamethrin orally (dose not stated). Dogs exhibited vomiting, hyperexcitaibility, stiffness in the hind legs, and impaired body movement when 100 mg/kg of deltamethrin was orally administered (National Pesticide Information Center, 2012).

Reported $LD_{50}$ values for rats range from 30 mg/kg (with an oily vehicle) to greater than 5000 mg/kg (in an aqueous vehicle). The substance used to administer deltamethrin can influence the $LD_{50}$ for the oral route, most likely by affecting absorption (National Pesticide Information Center, 2012).

Guinea pigs exhibited an increase in signs of biting, scratching, and licking within 1 hour of a dermal application of deltamethrin (Soderlund et al., 2002). The dermal LD50 is greater than 2000 mg/kg for rabbits (U.S. EPA, 1997).

Symptoms from inhalation of deltamethrin in rats include grooming, hyperactivity, uncoordinated movements, and hypersensitivity to noise and touch (National Pesticide Information Center, 2012). Deltamethrin is considered low in toxicity by inhalation with a 4-hour LC50 of 2.2 mg/L and a 1-hour LC50 of greater than 4.6 mg/L in rats (National Pesticide Information Center, 2012).

### B.4.2. Subchronic and Chronic Toxicity

The nervous system is a primary target for deltamethrin toxicity. Based on a review of the literature, OEHHA determined that its potential effects on the developing brain in children are of concern (OEHHA, 2007).

#### B.4.2.1. Human Studies

No human data were found on the chronic health effects of deltamethrin.

#### B.4.2.2. Animal Studies

No treatment-related effects were reported at any dose in mice fed deltamethrin for 24 months at 0, 1, 5, 25, or 100 mg/kg-day, or beagle dogs fed an average dose of 1.1 mg/kg-day for 24 months. In another study with dogs, the lowest observed adverse effect level (LOAEL) was 10 mg/kg-day due to chewing and scratching of extremities, tremors, abnormal gait, liquid feces, and changes in blood chemistry (U.S. EPA, 1997; U.S. EPA, 2004). Female rats fed deltamethrin daily for 84 or 14 days at doses of 6 mg/kg or 15 mg/kg, respectively, exhibited immunosuppression of the humoral immune response, decreased lymphocyte enzyme activity, splenic plaque-forming cells, and rosette-forming lymphocytes (ATSDR, 2003). Male and female Sprague-Dawley rats administered deltamethrin in feed at 0, 0.11, 1.1 or 2.8 mg/kg-day for 18 months exhibited dose-related increases in degeneration of sciatic, tibial, and plantar nerves in a study submitted for regulatory purposes by Goldenthal (1980) (California Department of Pesticide Regulation, 2000).

### B.4.3. Mutagenicity and Cancer

The U.S. EPA classified deltamethrin as “not likely to be a human carcinogen” by all routes of exposure (U.S. EPA, 2004).

#### B.4.3.1. Human Studies

No studies investigating mutagenicity or cancer in humans were identified.

#### B.4.3.2. Animal Studies

Deltamethrin did not increase tumor incidence in mice fed technical grade deltamethrin at daily doses of 0, 1, 5, 25, or 100 ppm for two years nor in rats fed technical grade deltamethrin at daily doses of 0, 2, 20, or 50 mg/kg for two years

(National Pesticide Information Center, 2012). One study showed that deltamethrin had tumor initiating, but not tumor promoting, potential in Swiss albino mice (Shukla et al., 2001).

The U.S. EPA (2004) does not consider deltamethrin to be a mutagen based on negative results from a bacterial DNA assay, an Unscheduled DNA Synthesis (UDS) assay in primary rat hepatocytes, and an *in vitro* chromosome aberration study. CDPR (2000) noted that while previous studies showed lack of genotoxicity potential, more recently published studies of formulations with deltamethrin as the active ingredient reported positive genotoxicity in both *in vivo* (e.g., chromosome aberrations and micronucleus test) and *in vitro* (sister-chromatid exchange in human lymphocyte) test systems. Further positive *in vivo* and *in vitro* findings of genotoxicity such as chromosomal aberrations and micronuclei have been reported (Chauhan et al., 2007; Ismail et al., 2012; Sekeroglu et al., 2012).

## C. Male Reproductive Toxicity

### C.1. Human Male Reproductive Toxicity Studies

There are no studies examining male reproductive effects in humans exposed to deltamethrin.

### C.2. Animal Male Reproductive Toxicity Studies

The animal studies of male reproductive toxicity are comprised of two studies conducted for the purpose of pesticide registration per guidelines for the Federal Insecticide, Fungicide and Rodenticide Act (FIFRA) and studies published in the open scientific literature. The FIFRA studies are presented first. All studies are summarized in detail in the Appendix.

No adverse effects on the reproductive system were observed at any dosage level tested in the three generation study in rats conducted by Wrenn (1980). The study had severe limitations such as lack of test article purity, the lack of adequate dose level justification and absence of full histopathology of parental animals. CDPR concluded this study was not adequate for the purposes of pesticide registration.

In a two-generation study by Hoberman (1992) 30 rats/sex/group were dosed in the diet with 0, 5, 20, 80 or 320 ppm of deltamethrin technical (purity: 99.7%). The first generation of parents (P1) were treated with deltamethrin in the diet 82 days prior to mating, during the mating period, for three weeks of gestation and three weeks of lactation. From the offspring, i.e., second generation (F1) animals, 30 per sex/exposure-group were selected as parents and treated for a minimum of 86 days in the premating period, the mating period, for three weeks through the gestation period and for another three weeks through the lactation period.

In the P1 males in the 320 ppm group, absolute organ weights were not affected by the treatment. The relative mean testis ($p<0.01$), seminal vesicles with fluid ($p<0.05$), pituitary ($p<0.05$), and brain ($p<0.01$) weights were increased over those of the control values. In the F1 males in the 320 ppm group the absolute mean weights of the epididymides ($p<0.01$) and testes ($p<0.01$) were less than those of the controls. The ratio of testes weight to brain weight was also reduced at this dose level in these animals. In contrast, the relative mean weights for the testes ($p<0.05$), seminal vesicles with fluid ($p<0.01$) and brain ($p<0.01$) were greater than those of the control. While the relative weights of the testes were increased in both P1 and F1 animals at the highest dose tested, the terminal body weights were reduced for these animals. In P1 animals, gross lesions of testes were identified in 1 animal at each of the following groups: 5, 80 and 320 ppm. In the F1 high dose group, excessive mortality allowed only values for testes weights of 11 animals to be obtained. No treatment-related effects on

other reproductive parameters were observed. Overall the authors reported that no adverse reproductive effects were indicated.

Salem et al. (1988) examined the effect of chronic treatment with two sublethal doses of deltamethrin or dimethoate (organo-phosphorus) on body weight and semen characteristics in adult male rabbits. One group served as the control group and the others were tested for exposure to deltamethrin or dimethoate at $1/10^{th}$ $LD_{50}$ and $1/100^{th}$ $LD_{50}$ via gelatin capsule. The actual $LD_{50}$ value was not stated in the study report (Salem et al., 1988). Pesticide (both deltamethrin and dimethoate) treatment resulted in a decline in body weight, libido, ejaculate volume, sperm concentration and semen initial fructose; and an increase in abnormal and dead sperm. The most common types of abnormalities noted were coiled tail, tapering head, small head and double tail. Pesticide treatment caused marked increases ($p<0.01$) in the percentage of abnormal and dead sperm in a dose-dependent manner ranging from 80 – 200 % of control group during preliminary, treatment and recovery periods. The differences in sperm concentration in the treated animals were significant ($p<0.01$) only during the recovery period and the sperm concentration was lowest in the animals treated with the high dose of dimethoate. The effects with dimethoate were greater than deltamethrin. The adverse effect of these pesticides on semen quality continued during the post-treatment period. According to the authors, since fructose formation by the accessory glands is dependent on secretion of testosterone by the testis, the observed reduction in initial fructose suggests a corresponding decrease in testosterone secretion by pesticide treatment. Hence, this deleterious effect on sperm formation together with the decline in libido suggests a decrease in testosterone secretion from exposure to these pesticides.

Abd el-Aziz et al. (1994) studied the effect of diazinon and deltamethrin at two dosage levels on male reproductive tissues. Doses of deltamethrin at 1 and 2 mg/kg BW ($1/100^{th}$ $LD_{50}$ and $1/50^{th}$ $LD_{50}$, respectively) were given orally to male rats for 65 consecutive days to cover a complete spermatogenic cycle. The first male group served as the control and was treated orally with distilled water (0.5 ml/rat/day). At the end of administration period, 5 male rats from each group were isolated in a separate cage. Each male rat in the control and treated group was paired separately with a female for 48 hours to determine conception rate. In addition, 5 male rats from each group were left for 60 days without treatment and were mated as described to determine whether the effect was temporary or permanent. Analysis of the weights of the organs of the reproductive system, semen picture, testosterone levels and the conception rate were the criteria used to evaluate the reproductive efficiency of the treated rats (Abd el-Aziz et al., 1994). The effect of deltamethrin administration on male fertility (as expressed by percentage of pregnancy after mating) is noted in Table 3 below.

**Table 3. Effect of deltamethrin administration on male fertility (n=8)**

| | Control | Deltamethrin | | | |
|---|---|---|---|---|---|
| | | 1 mg/kg | | 2 mg/kg | |
| | | A | B | A | B |
| Number of female rats | 8 | 8 | 8 | 8 | 8 |
| Number of pregnant rats | 6 | 3 | 3 | 3 | 2 |
| Percentage of pregnancy | 75 | 37.5 | 37.5 | 37.5 | 25 |
| A: After 65 days of administration | | | | | |
| B: 60 days after stopping administration | | | | | |

Both doses of deltamethrin decreased the weights of most genital organs and sperm motility. In treated rats, this was associated with an increase in the percentage of dead and morphologically abnormal spermatozoa. A decrease in sperm concentration was noted at the low dose of 1 mg/kg (39%) and 2 mg/kg (55%) respectively. The same pattern continued for 21 days after administration of the chemical was stopped, resulting in a decrease of 31% and 45% respectively. Decreases in live sperm (%) and plasma testosterone levels were observed in all treated groups, and degenerative changes were seen in testicular and accessory gland structures. Overall the study demonstrated that oral administration of deltamethrin for 65 consecutive days decreased the conception rate in non-treated females that were mated with treated males. The percentage of pregnancy was decreased from 75 to 37. Diazinon also had similar effects.

El-Gohary et al. (1999) examined and characterized testicular apoptosis induced by exposure of male rats to deltamethrin at 1 mg/kg intraperitoneally (i.p.). Also, to assess the role played by nitric oxide as well as other reactive oxygen species in controlling this testicular apoptosis, rats were injected with nitric oxide synthase inhibitors such as N(G)-nitro monomethyl L-arginine hydrochloride (L-NMMA) prior to exposure to deltamethrin (El-Gohary et al., 1999).

The testicular apoptotic DNA fragmentation pattern and associated histopathological changes of testicular tissue sections showed that apoptosis was confined to the basal germ cells, primary and secondary spermatocytes. The authors interpreted these changes, in addition to the appearance of vacuoles in the Sertoli cells in deltamethrin-intoxicated animals, as indicating the suppression of spermatogenesis. Plasma levels of both nitric oxide and lipid peroxides measured as malondialdehyde were also found to be significantly increased in deltamethrin-treated animals.

Administration of nitric oxide synthase inhibitors such as L-NMMA (1 mg/kg) to rats, two hours before exposure to deltamethrin, was effective in the reduction of the typical testicular apoptotic DNA fragmentation pattern and the associated histopathological changes.

Photomicrographs of these changes included in the report are presented in the Appendix. According to the authors, these findings indicate that deltamethrin induces testicular apoptosis and the apoptosis may be mediated by nitric oxide.

Shukla et al. (2000) evaluated dominant lethal and sperm effects, in swiss albino mice (male) that were exposed orally to three doses (0.36, 0.72 and 1.08 mg/kg body weight) of deltamethrin dissolved in corn oil. Following the treatment, each male of the control and treated groups was mated with untreated females, every week for 6 weeks. All mated females were sacrificed on the 13th day of separation and their ovaries and uterus were examined and assessed for the mutagenic index, and pre- and post-implantation losses. Significant pre-implantation losses were not observed either weekly or on an overall average basis (Shukla et al., 2000). Post-implantation losses were observed at medium and high doses of deltamethrin. A significant decrease ($p \leq 0.05$) in the mean total number of implants per female was noted on week 1 for the low dose (0.36 mg/kg), week 2 for the mid-dose (0.72 mg/kg), and week 2 for the high dose of 1.08 mg/kg with a decreasing trend. The decrease was not significant for all other time points. Graphically the authors demonstrated a slight increase in dominant lethal mutation rate at the medium (5%) and high (7.5%) dose at the third week, which decreased subsequently. The authors reported that a slight increase in dominant lethal mutation rate was observed by increasing doses of deltamethrin in early weeks, but decreased in later weeks. The authors also commented that the potency of the mutation rate noted was much less than other known mutagenic and carcinogenic compounds like benzo(a)pyrene and methylmethane sulfonate which have shown pre-fertilization defects and higher mutation rates of 20-30% at low doses in male germ cells, possibly implying a weak mutagenic effect with deltamethrin.

Andrade et al. (2002) examined the effects of deltamethrin administered to female rats (from day 1 of pregnancy to day 21 of lactation) at levels of 0, 1.0, 2.0, or 4.0 mg/kg on the reproductive system of their male offspring. Maternal toxicity was not detected at any dose level. Significantly adverse effects were seen only on testicular and epididymal absolute weights and the diameter of seminiferous tubules in the highest dose group (Andrade et al., 2002). While the authors reported that the number of sperm from the cauda epididymis and the daily sperm production were unaffected in the deltamethrin-exposed groups, daily sperm production was reduced by 12% ($p=0.08$; ANOVA–Duncan) in animals exposed to 4.0 mg/kg when compared to control animals. The percentage of abnormal sperm in the animals exposed to deltamethrin was similar to that of control animals.

When examining fertility in this study, deltamethrin-treated and control male rats (120 days old) were mated overnight with unexposed regular-cycling females (1:2). One week after the fertility study, the same male rats were used to assess the effects of deltamethrin on sexual behavior. The sexually experienced males were mated with unexposed females in heat (1:1). Animals were filmed for 30

min during the dark period under dim red illumination and each male was evaluated separately for several parameters. The groups did not differ significantly in any of the sexual behavior endpoints investigated such as mount, intromission, and ejaculatory latencies; number of intromissions up to ejaculation; and ejaculatory frequency within 30 min. However, a trend toward reduction in the number of animals with ejaculations was observed. According to the authors, *in utero* and lactational exposure to deltamethrin may induce subtle changes in reproductive behavior and physiology of male offspring rats at dose levels that do not cause maternal toxicity.

**Table 4. Effects of *In Utero* and Lactational Deltamethrin Exposure on Absolute and Relative (% of body weight) Organ Weights of Adult Male Offspring Rats**

| Weights | Deltamethrin (mg/kg)[B] | | | |
|---|---|---|---|---|
| | 0 | 1 | 2 | 4[C] |
| Body weight (g)[A] | 363±33 | 357±24 | 361±39 | 351±42 |
| Testis (g)[A] | 1.47±0.12 | 1.42±0.11 | 1.47±0.12 | 1.31±0.13** |
| (%) | (0.41±0.03) | (0.40±0.04) | (0.41±0.04) | (0.38±0.06) |
| Epididymis (mg)[A] | 563±42 | 543±54 | 536±43 | 509±46* |
| (%) | (0.16±0.04) | (0.15±0.02) | (0.15±0.1) | (0.14±0.02) |
| Prostate (mg)[A] | 526±123 | 501±95 | 470±183 | 449±145 |
| (%) | (0.15±0.04) | (0.14±0.03) | (0.13±0.04) | (0.13±0.04) |
| Seminal vesicle (mg)[A] | 706±115 | 729±92 | 687±146 | 645±115[D] |
| (%) | (0.20±0.03) | (0.20±0.03) | (0.19±0.03) | (0.18±0.04)[D] |

[A]16 animals/dose levels were used ([C]15 animals; [D]14 animals).

[B] Mean ± Standard Deviation.

* Significantly different from control group ($p<0.05$; ANOVA-Tukey)

** Significantly different from control group ($p<0.01$; ANOVA-Tukey)

Issam et al. (2009) investigated the effects of three subcutaneous treatments with deltamethrin in male rats. The levels of exposure were as follows:

Group 1: 0.003 mg/kg-day for 30 days

Group 2: 0.003 mg/kg-day for 30 days and then 0.03 mg/kg-day for 15 additional days

Group 3: 0.003 mg/kg-day for 30 days, then 0.03 mg/kg-day for 15 additional days and 0.3 for 15 more days

Control rats were injected with an equivalent volume of solvent (70% ethanol) for 30, 45 or 60 days

The effects on testes histopathology, sex hormones and oxidative stress were evaluated. The authors reported that subcutaneous deltamethrin treatment produced an arrest of spermatogenesis and a significant decrease ($p \leq 0.05$) of plasma FSH concentration compared to controls after 45 and 60 days but not after 30 days. Plasma luteinizing hormone (LH) was decreased significantly after 60 days, as was testosterone. The authors noted that the significant decrease of FSH, LH and testosterone signal that the hormonal system is targeted by

deltamethrin, and question whether the steroidogenic acute regulatory (StAR) protein responsible for cholesterol transport across the outer mitochondrial membrane for testosterone production could be a target for deltamethrin. Also according to the authors, "… the disharmony in sex hormones and malondialdehyde (MDA) levels in rats that is related to dose, length of treatment and to the lipid peroxidation is thought to be one of the molecular mechanisms involved in deltamethrin-induced toxicity in the male gonads". The authors also reported histopathological effects such as condensed chromatin into pyknotic nuclei within germinal cells and interstitial tissue regression, desquamated cells in the lumen of seminiferous tubules, vacuolization within germ cells and apoptotic bodies in some tubules (Issam et al., 2009).

Ben Abdallah et al. (2009) studied the effects of deltamethrin (5 mg/kg-day), dimethoate (5, 15 and 28 mg/kg-day) and a mixture of the two pesticides (5 mg/kg-day) on male reproduction in mice (Ben Abdallah et al., 2009). After treatment, all male mice were weighed and killed with diethyl ether. Testes and epididymides were weighed and spermatozoa obtained were evaluated for percent motility and sperm content. Percent motility was determined by progressive and non-progressive movements of spermatozoa, and sperm count was determined. A significantly decreased sperm count, motility and viability and significantly increased percent morphologically abnormal spermatozoa compared with the controls was noted in the group exposed to dose levels of 5 mg/kg-day deltamethrin and the group exposed to the mixture of dimethoate + deltamethrin (5 mg/kg-day) (Ben Abdallah et al., 2009).

**Table 5. Epididymal sperm parameters in male mice treated with deltamethrin and dimethoate**

| | Deltamethrin | | Deltamethrin + Dimethoate |
|---|---|---|---|
| Treatment (N=10): | 0 | 5 (mg/kg-day) | 5 (mg/kg-day) |
| Sperm Count Per epididymis ($10^6$) | 5.87 ± 1.15 | 2.43 ± 0.54** | 2.21 ± 0.32** |
| Sperm parameters: | | | |
| Motility (%) | 71.5 ± 8.51 | 57.8 ± 7.54** | 54 ± 0.54** |
| Viability (%) | 88.5 ± 6.96 | 57.2 ± 7.65** | 65 ± 0.23** |
| Abnormal Sperm (%) | 7 ± 3.37 | 17 ± 5.20** | 14.2 ± 0.24** |

Data are presented as mean ± SD.
*Significantly different from the control at p ≤0.05.
**Significantly different from the control at p ≤ 0.01

The authors concluded that deltamethrin alone ( 5 mg/kg-day) and the combination of dimethoate and deltamethrin reduce body weight and epididymal

sperm parameters and induce the abnormal morphology of spermatozoa in male mice.

Ben Abdallah et al. (2010) examined in an *in vitro* study the reproductive toxicology of deltamethrin on rat spermatozoa. Spermatozoa were incubated with different concentrations (0, 10, 50, 100 and 200 µm) of deltamethrin for 3 hours at 37°C. Subsequent to exposure, sperm parameters (motility, viability and abnormal morphology), malondialdehyde , superoxide dismutase and catalase levels were determined. The potency of deltamethrin to induce oxidative stress response in rat spermatozoa was examined and the findings demonstrated *in vitro* exposure to deltamethrin at different concentrations caused a significant decline of sperm motility and viability (graphically presented in the article) and an increase in abnormal sperm morphology, malondialdehyde superoxide dismutase and catalase levels ) (Ben Abdallah et al., 2010). The authors concluded that deltamethrin exposure *in vitro* may induce toxicity by enhancing the production of reactive oxygen species and disrupting the balance between pro-oxidants and antioxidants as a result of lipid peroxidation of cell membranes.

Oda and El Maddawy (2011) assessed the adverse effects of deltamethrin on reproductive organs and fertility in male rats and evaluated the protective role of a combination of vitamin E (VE) and selenium (Se) in alleviating the detrimental effect of deltamethrin on male fertility. The authors treated adult male Wistar rats (10 weeks old) orally (intra-gastrically) with a commercial deltamethrin-based pesticide “Butox® 5%EC” alone (yielding 0.6 mg/kg-day deltamethrin) or in combination with subcutaneous injection of a VE and Se mixture containing 1.67 mg Se and 150 mg VE per ml (trade name “Viteselen® 15”). The authors found that treatment with deltamethrin alone caused statistically significant reductions in the relative weights of testis, epididymis, and accessory sex organs (seminal vesicles and prostate combined). Also, compared to the control group, epididymal sperm count, motility, and viability, and serum levels of testosterone were reduced significantly ($p<0.05$). The percentage of epididymal sperm with abnormal morphology in the deltamethrin-treated group was statistically-significantly higher (30.67%) than that in the control group (8.67%). Deltamethrin treatment also reduced the serum level of testosterone and level of glutathione in testicular tissues, and increased the testicular level of malondialdehyde , indicating increased activity of lipid peroxidation. The testis, epididymis, prostate, and seminal vesicles of rats that received deltamethrin treatment showed severe degenerative changes. Co-treatment with Viteselen®15 attenuated the adverse effects of deltamethrin, including improvement in all the parameters assessed and the histopathological changes in the testis, epididymis, prostate, and seminal vesicles.

Ben Slima et al. (2012) treated mice daily from gestation day (GD) 3 - 21 by oral gavage with deltamethrin (5 mg/kg-day), dimethoate (5 mg/kg-day), or a mixture of the two pesticides deltamethrin + dimethoate (5 mg/kg-day). A control group was also included. While body weights were not affected, a significant reduction

in testis weights, epididymal sperm count, motility, and viability in adulthood was noted in deltamethrin-treated mice (n=4). Male offspring on PND 60-65 were examined. The proportion of epididymal sperm with abnormal morphology was significantly increased. Degeneration and loss of germ cells, sloughing of seminiferous epithelium into the lumen of seminiferous tubules, and vacuolization in Sertoli cells were observed in deltamethrin-treated mice. Treatment with the mixture that contained unknown amounts of deltamethrin and dimethoate, respectively, did not affect testis weight, but caused adverse changes in sperm parameters similar to those observed in mice treated with deltamethrin alone. Epididymal weight was not affected by any treatment.

Finally, one neurodevelopmental study discussed in section E.2. below also reported a delay in preputial separation in the male offspring of dams exposed to 200 ppm technical grade deltamethrin in the diet from GD 6 through lactation day (LD) 21 in a standard developmental neurotoxicity (DNT) study (Gilmore et al., 2006).

**Table 6. Summary of Male Reproductive Effects Seen in Animal Studies**

| REFERENCE | SPECIES/STUDY DESIGN | EFFECTS | COMMENTS |
|---|---|---|---|
| Salem et al., 1988 | Rabbits<br>5 groups (3 animals/group) control group<br>2 groups -dimethoate<br>2 groups - deltamethrin at 1/10$^{th}$ $LD_{50}$ and 1/100$^{th}$ $LD_{50}$ orally via gelatin capsule.<br>($LD_{50}$ not stated).<br>6 weeks- pretreatment<br>6 weeks - exposure<br>6 weeks - recovery period<br>Semen collected twice weekly from all the animals for 18 weeks. | Deltamethrin alone:<br>↓ Body weight, libido, ejaculate volume, sperm concentration<br>↑% of dead spermatozoa<br>Similar effects were seen for dimethoate | Effects of dimethoate greater than deltamethrin.<br><br>Method of semen collection not stated in article. |
| Hoberman 1992 | Rat- Two generation in diet 0, 5, 20, 80 or 320 ppm deltamethrin. Premating through day 21 of lactation | In P1 animals- gross lesions of testes identified in 1 animal at 5, 80 and 320ppm<br>In F1 males -absolute mean weights of the epididymides and testes in the high dose group < controls;↓ratio of testes weight to brain weight in F1 males | In the F1 high dose group, excessive mortality allowed only values of 11 animals to be obtained |
| Abd el-Aziz et al., 1994 | Rat (Oral) deltamethrin for 65 days (1, 2 mg/kg-day). Mated with non-treated females | ↓Testosterone levels<br>↓ Weight of male reproductive organs and sperm motility<br>↑% of dead spermatozoa | ↓Conception in non-treated females |
| El-Gohary et al., 1999 | Rat 1 mg/kg-day (I.P) deltamethrin for 21 days | Vacuoles in sertoli cells<br>Apoptosis in testes | Apoptosis may be mediated by nitric oxide |

**Table 6. Summary of Male Reproductive Effects Seen in Animal Studies (continued)**

| REFERENCE | SPECIES/STUDY DESIGN | EFFECTS | COMMENTS |
|---|---|---|---|
| Shukla and Taneja, 2000 | Mouse Dominant-lethal (Oral) Control 0 (corn oil), 0.36, 0.72 and 1.08 mg/kg) deltamethrin dissolved in corn oil for 2 weeks Control and treated males, mated with untreated females, every week for 6 weeks. All mated females sacrificed on the 13th day of separation. Ovaries and uterus evaluated | ↑Post-implantation losses at medium and high doses Slight ↑ in dominant –lethal mutation rate in early weeks but ↓in later weeks | |
| Issam et al., 2009 | Rat (sub-cutaneous) 2 ppm for 30 days, 20 ppm for 45 days and 200 ppm for 60 days | Arrest in spermatogenesis, Disharmony in sex hormones | |
| Ben Abdallah et al., 2009 | Mouse: oral by gavage for 21 days dimethoate (5 mg/kg-day) and dimethoate + deltamethrin mixture (5 mg/kg-day) | Deltamethrin and mixture ↓ Motility & viability of sperm ↑ % abnormal sperm | |
| Ben Abdallah et al., 2010 | Rat spermatozoa Incubated with 0, 10, 50, 100 and 200 µM for 3 hours at 37 °C in vitro | ↓ Motility & viability of sperm ↑abnormal sperm morphology | |
| Oda and El Maddawy 2011 | Rats (oral gavage) 0.6 mg/kg alone or 0.6 mg/kg-day and 1.2 mg/kg, twice per week s/c Viteselen (Vit E & Selenium mixture) | ↓Relative weight of testis, epididymis, and accessory sex organs; ↓ epididymal sperm count, motility, and viability, and ↓ serum levels of testosterone Severe degenerative histopathological changes in the testis, prostate, epididymis and seminal vesicles | Effects attenuated by Vit E & Selenium mixture |
| Ben Slima et al., 2012 | Dimethoate, deltamethrin (5mg/kg-day) and combination to pregnant mice on GD 3 – 21(oral gavage) | Deltamethrin alone: ↓ Testis weights, epididymal sperm count, motility, and viability ↑ Abnormal morphology of epididymal sperm vacuolization in Sertoli cells, degeneration and loss of some cells | |

## C.3. Integrative Evaluation of Male Reproductive Toxicity

*In vivo* studies examining the effect of deltamethrin exposure on the male reproductive system are available in mouse, rat and rabbit. One *in vitro* study is also available. These studies are summarized in Table 6. In one two-generation study conducted to meet federal regulatory guidelines under FIFRA, exposure of rats extended from the premating period, during gestation and through day 21 of

lactation when the pups were weaned (Hoberman, 1992). In this study, the absolute mean weights of the epididymides and testes of the offspring in the high dose group (320 ppm deltamethrin in diet) were significantly less than those of the controls. The ratio of testes weight to brain weight was also reduced at this dose level.

In rabbits exposed to deltamethrin, a decrease in libido, ejaculate volume and sperm concentration was noted along with an increase in the percentage of dead spermatozoa at 1/100$^{th}$ the $LD_{50}$, but the actual doses were not stated (Schardein, 1990b). In a rat study, oral administration of deltamethrin for 65 consecutive days decreased the conception rate in non-treated females that were mated with treated males with decreases in sperm concentration noted at the low dose of 1 mg/kg (39%) and 2 mg/kg (55%), respectively (Abd el-Aziz et al., 1994). The decrease in live sperm and plasma testosterone levels continued and was noted 21 days after administration of the chemical was stopped, along with degenerative changes in testicular and accessory gland structures. Intraperitoneal injection of deltamethrin to male rats at 1mg/kg was shown to induce testicular apoptosis (El-Gohary et al., 1999), and in another study *in utero* and lactational exposure to deltamethrin induced subtle changes in reproductive behavior and physiology of male offspring (reduction in the number of animals with ejaculate) along with a decrease in testicular and epididymal absolute weights and the diameter of seminiferous tubules in the highest dose group of deltamethrin (4.0 mg/kg). Subcutaneous exposure to deltamethrin at doses as low as 0.003 mg/kg-day for a period of 30, 45 or 60 days produced an arrest of spermatogenesis, and a significant decrease ($p \leq 0.05$) in plasma FSH concentration compared to controls after 45 and 60 days, but not after 30 days, suggesting the hormonal system is targeted by deltamethrin (Issam et al., 2009). Additionally in mice, oral administration at levels as low as 5 mg/kg-day of deltamethrin alone or deltamethrin and dimethoate administered together resulted in significantly decreased sperm count, motility and viability and a significantly increased percentage of morphologically-abnormal spermatozoa compared with the controls (Ben Abdallah et al., 2009). In rats, Oda and El Maddawy (2011) demonstrate severe degenerative histopathological changes in the testis, prostate, epididymis and seminal vesicles that were attenuated by vitamin E and selenium mixture (Oda et al., 2011). Gestational treatment in mice with deltamethrin alone or in combination with dimethoate produced significant reduction in the testis weights, epididymal sperm count, motility, and viability in male offspring (Ben Slima et al., 2012). Overall, there is evidence from a number of studies for a decrease in sperm count and increase in dead spermatozoa in mice, rats and rabbits at relatively low doses of deltamethrin via several routes of exposure. The mode of action may be via altered hormonal levels.

## D. Female Reproductive Toxicity

### D.1. Human Female Reproductive Toxicity Studies

There are no studies examining female reproductive effects in humans exposed to deltamethrin.

### D.2. Animal Female Reproductive Toxicity Studies

In a three generation reproduction study in rats conducted by Wrenn, (1980) and described above in Section C.2, technical grade deltamethrin administered in the diet to Charles River CD rats did not produce adverse effects on the reproductive system. The study had severe limitations such as lack of test article purity, the lack of adequate dose level justification and absence of full histopathology of parental animals as noted earlier. CDPR concluded this study was not adequate for the purposes of pesticide registration.

The study by Hoberman (1992) described above in Section C.2 was conducted per FIFRA guidelines to detect effects on the reproductive system as well as developmental toxicity. In this study thirty rats/sex/group were dosed in the diet with 0, 5, 20, 80 or 320 ppm of deltamethrin technical (purity: 99.7%) for two generations. The absolute mean non-gravid uterine ($p<0.01$) and pituitary ($p<0.05$) weights were less than those of the control for the P1 females in the 320 ppm group. For the F1 females of the same group, the absolute mean weight for the non-gravid uterus ($p<0.01$) was less than that of the control. These were the only effects in the female reproductive system observed.

Lemos et al. (2011) examined the response of blastocyst-endometrium interactions in albino rats to deltamethrin (Lemos et al., 2011). Thirty-five pregnant albino rats received daily doses of 1.0, 2.0 or 4.0 mg/kg deltamethrin (in the formulation Decis® 25CE) by oral gavage immediately following the confirmation of copulation. The same number of rats received daily doses of 185, 1850 or 3700 mg/kg of the biological insecticide, XenTari® (B. thuringiensis subsp. Aizawai). Animals were sacrificed on the seventh day of pregnancy and uteri were collected for examination. The rats treated with the higher doses of deltamethrin exhibited a significant reduction in the number of implantation sites, vacuolated trophoblast cells, rare cytotrophoblasts, accentuated leukocyte infiltration, increase in vascularization of sites and blood in the uterine lumen. Similar effects were seen with XenTari®. The decidua was more fibrous, particularly in the rats treated with the highest dose of XenTari®. There were no statistically significant differences in weights between groups, or number of blood vessels in the implantation sites between groups. Overall, the highest doses of both deltamethrin and XenTari® produced histopathological alterations in the implantation sites as well as a reduction in the number of sites in female rats, thereby compromising the implantation process.

Lemos et al. (2012) administered deltamethrin to rats to study the effects on fertility, the morphology of the neonates and other histological parameters in the early stage of pregnancy (Lemos et al., 2012). The doses were selected to not cause clinical signs of intoxication. Seventy pregnant albino rats were analyzed with regard to fertility and histopathology of the kidneys, liver and lungs. The rats were subjected to three sub-lethal doses of deltamethrin (in the formulation Decis® 25CE) or the biological insecticide XenTari® . After confirmation of copulation, the insecticides were administered orally for either seven days (for organ assessment) or during the entire pregnancy (for neonate assessment). The analysis revealed histopathological alterations in all organs analyzed in both treatments. No miscarriages occurred and the neonates did not exhibit signs of malformation of the head, limbs, thorax or abdomen. However, there were a smaller number of pups in the groups that received higher doses of the insecticides in comparison to the control group. Both insecticides produced similar lesions in the kidneys, liver and lungs and reduced the fertility of rats when administered at sub-lethal doses with no clinical signs of intoxication.

## D.3. Integrative Evaluation

In the standard two-generation reproductive study conducted according to FIFRA guidelines, the absolute mean weight for the non-gravid uterus was less than that of the control ($p<0.01$) for the P1 and F1 females of the high dose group. Also for the P1 females in the same group, the absolute mean pituitary weights were less than those of the controls ($p<0.05$). No other adverse effects were noted. In a study examining the effect of deltamethrin on the response of blastocyst-endometrium interactions in rats, the implantation process was affected. Histopathological alterations in the implantation sites as well as a reduction in the number of sites were noted. In another report, a smaller number of pups and reduced fertility was also noted subsequent to deltamethrin exposure.

# E. Developmental Toxicity

## E.1. Human Studies

There are no studies examining developmental effects in humans exposed to deltamethrin.

## E.2. Animal Studies

Animal studies reporting developmental toxicity outcome following deltamethrin exposure are summarized below. Studies examining neurodevelopmental endpoints are presented first followed by those examining other developmental endpoints.

More detailed descriptions of the study designs and results are provided in the Appendix.

### E.2.1. Neurodevelopmental Toxicity Studies and Related Data

Groups of 30 mated female Wistar rats were exposed to 0, 20, 80 or 200 ppm technical grade deltamethrin in the diet from GD 6 through lactation day (LD) 21 in a standard developmental neurotoxicity (DNT) study (Gilmore et al., 2006). The mean daily test substance intake based on the average daily food consumption for the last two weeks of gestation and three weeks of lactation was 1.64, 6.78 and 16.1 mg/kg-day for the 20, 80 and 200 ppm groups, respectively. Maternal animals were evaluated for cage-side and detailed clinical observations, body weight and food consumption throughout the treatment period.

Representatives of surviving offspring were evaluated for detailed clinical observation, functional observational battery, body weight, preputial separation and vaginal patency, automatic measure of activity (figure-eight maze), auditory startle habituation, learning and memory (passive avoidance after weaning and water maze task) and ophthalmic examination. Neural tissues were collected from 10/sex/dietary level on PND 21 and PND 75 for microscopic examination and morphometry. The authors reported reduced post-natal body weight and reduced fixed female offspring brain weight at termination. Increased resistance at removal with vocalization was observed in the 200 ppm group male offspring. No adverse effects were noted for auditory startle habituation, learning and memory (passive avoidance after weaning and water maze task).

Neurodevelopmental consequences of gestational exposure to low doses of deltamethrin were evaluated by Aziz et al. (2001). Rats were exposed to deltamethrin (1mg /kg) during GD 14-20. Selected neurobehavioral, neurochemical and immuno-histochemical parameters were examined (Aziz et al., 2001). While exposure occurred only during the prenatal period, the animals were evaluated at 6 and 12 weeks postnatally. A significant increase in

acetylcholinesterase activity and decrease in (3) H-quinuclidinyl benzilate binding in the hippocampal region of deltamethrin-exposed animals suggested impairment in cholinergic (muscarinic) receptors. Deltamethrin significantly decreased ($p \leq 0:05$) the cholinergic (muscarinic) receptors at both 6 and 12 weeks by 48% and 39%, respectively, in the hippocampal region, as compared to controls. Also, a significant decrease in learning and memory was observed both at 6 and 12 weeks, and was directly correlated with a decrease in muscarinic receptor binding. Immunohistochemistry and image analysis of growth-associated protein-43, a neuron-specific protein present in axonal growth cone and a marker for neuronal differentiation and synaptogenesis, exhibited aberrant increase in its expression in the hippocampus in exposed rats at both time periods. These findings provide evidence that low level exposure to deltamethrin *in utero* during the brain growth spurt period adversely affects the developing brain. The changes persisted even up to 12 weeks postnatally in rats for biochemical and behavioral parameters.

Lazarini et al. (2001) studied the neurodevelopmental effects of prenatal exposure to deltamethrin (0.08 mg/kg-day orally via gavage; GD 6-15) using behavioral tests such as forced swimming and open-field behaviors. (Lazarini et al., 2001). Groups of 10 animals were used. Maternal and offspring body weight, physical and reflex development were unaffected by prenatal exposure to deltamethrin. At 21 days of age, open-field locomotion frequency and immobility duration of male and female offspring were not different between control and exposed animals. However, at 60 days of age, altered latency to float was observed and the activity of the striatal dopaminergic system appeared to reflect a persistent effect on animal motor activity mainly in males ($p \leq 0.05$), with the decrease in general activity observed suggesting higher levels of emotionality to the swimming behavior test in relation to control animals after previous exposure. The authors conjectured that forced swimming is an inescapable stressful situation causing a relatively short escape reaction followed by floating without performing any activity, and that animals submitted to this test might show high emotionality levels causing the reduced latency to float. The most important response to increased emotionality in the open field is freezing behavior, with a consequent decrease in locomotion frequency parallel to an increase in immobility. Animals observed in the open field had been previously submitted to the swimming test and hence, it is possible that the decreased locomotion frequency and the increased immobility observed in treated male rats were consequences of high levels of emotionality induced by the prenatal exposure to the pyrethroid. The authors concluded that prenatal exposure to a low dose of deltamethrin alters offspring emotionality, motor and dopaminergic activity systems and might reflect a persistent effect.

The Andrade et al. (2002) study of the effects of deltamethrin administered orally by gavage to female rats (from day 1 of pregnancy to day 21 of lactation) on the reproductive system of their male offspring is described in Section C.2.. Around PND 120 male rats were mated with unexposed females (in the mating study)

and assessed for sexual behavior. Sexual behaviour endpoints did not differ significantly among groups, but the authors reported a trend toward reduction in the number of animals with ejaculations. Also, two animals in the group exposed to the highest dose of deltamethrin (4.0 mg/kg) did not display any mount or intromission within 30 min. In the group treated with 2.0 mg/kg, an animal showed mount latency greater than 21 min, whereas in the control group all animals displayed mount latencies lower than 1 min. According to the authors, *in utero* and lactational exposure to deltamethrin may also induce subtle changes in reproductive behavior and physiology of male offspring rats at dose levels that do not cause maternal toxicity (Andrade et al., 2002).

Johri et al. (2006a) found that prenatal exposure (orally, presumably via gavage) to different doses (0.25, 0.5 or 1.0 mg/kg) of deltamethrin to pregnant Wistar rats from GD 5 to 21 produced dose-dependent alterations in the parameters of spontaneous locomotor activity in the offspring postnatally at 3 weeks. They also produced a dose-dependent increase in the activity of cytochrome P450 (CYP) dependent 7-ethoxyresorufin-O-deethylase (EROD), 7-pentoxyresorufin-O-dealkylase (PROD) and N-nitrosodimethylamine demethylase (NDMA-D) in brain and liver of offspring measured at 3 weeks postnatally (Johri et al., 2006a). The increase in the activity of CYP monooxygenases was found to be associated with the increase in the mRNA and protein expression of xenobiotic metabolizing CYP1A, 2B and 2E1 isoenzymes in the brain and liver of offspring. According to the authors, postnatal alterations in the expression of xenobiotic metabolizing CYP enzymes from *in utero* exposure to deltamethrin may be of significance as these CYP enzymes are involved in the neurobehavioral toxicity of deltamethrin and have a role in regulating the levels of ligands that modulate growth, differentiation, and neuroendocrine functions.

Johri et al. (2006b) noted that low dose prenatal exposure via oral route (0.25, 0.5 or 1.0 mg/kg on GD 5-21) to deltamethrin has the potential to produce long lasting effects on the expression of xenobiotic metabolizing cytochrome P450s in brain and liver of the offspring (Johri et al., 2006b). Also, due to the reduced activity of the cytochrome P450s during the ontogeny, the pyrethroid or its metabolites accumulating in the brain may not be cleared from the brain. According to the authors, this could lead to persistent increase in the expression of cerebral and hepatic cytochrome P450s in the offspring postnatally up to 9 weeks. Crofton et al. have remarked that since the authors exposed the pregnant rats to Decis 2.8% EC®, an emulsion that contains 2.8% technical grade deltamethrin and 97.2% unknown “inerts”, the conclusions cannot be attributed solely to deltamethrin exposure (Crofton et al., 2007). Nevertheless, the commenters stated that these problems in data interpretation should not detract from the fact that the study provided valuable information on the normal ontogeny of P450 mRNAs.

#### *E.2.1.1. Other Information Relevant to Neurodevelopmental Endpoints*

One study is not fully summarized here because it was published only as an abstract. Richardson et al. (2004) exposed mice to deltamethrin prior to breeding, during gestation and until weaning, and observed no overt toxicity to either the dams or the offspring, but found evidence that the developing dopaminergic system is sensitive to alterations induced by low level exposure to deltamethrin during the perinatal period.

The developmental neurotoxicity of pyrethroids was recently reviewed, which offers some insight on the potential effects of deltamethrin (Shafer et al., 2005). While the mechanisms of action on the developing brain have not been completely worked out, the review presented some evidence to suggest that pyrethroids could disrupt voltage-sensitive sodium channel (VSSC) function and expression during development, leading to irreversible neurotoxic effects. Pyrethroids are known to bind the α-subunit of VSSCs and different forms of the α-subunit are expressed during neurodevelopment. For example, high expression of Nav1.3 during the embryonic period diminishes as expression of Nav1.2 increases in the early postnatal period. The latter α-subunit is replaced by Nav1.6 as myelination proceeds and the authors concluded that given the previously reported differences in α-subunit sensitivity to pyrethroids, the complex ontogeny of VSSC expression could result in altered sensitivity and perturbation of the developing nervous system by pyrethroids like that seen with phenytoin, an anticonvulsant having a similar mode of action.

### E.2.2. Developmental Toxicity Studies for Other Endpoints

#### *E.2.2.1. FIFRA Guideline Studies Reporting on Developmental Effects*

Wrenn (1980) summarized in Section C.2.2 above, reported reduced mean pup body weights at lactation day 21 in F1, F2, and F3 litters. The study had severe limitations and CDPR concluded this study was not adequate for the purposes of pesticide registration; hence, the information from this study is not presented.

Schardein (1990a) administered deltamethrin technical (purity of 99.2%) by oral gavage to 25 mated female Crl:CD®VAF/Plus rats/sex/dose at levels of 0 (2 groups), 1 (2 groups), 3.3 (2 groups), 7 or 11 mg/kg-day from GD 6 through 15. The incidence of mortality (deaths and moribund sacrifice) at 3.3, 7 and 11 mg/kg-day was 1, 1 and 14, respectively. The authors reported that the death at 3.3 mg/kg was probably not compound-related but no justification was provided. At the high-dose, convulsions (9/25), anogenital staining (5/25), abnormal vocalization (3/25), and sensitivity to external stimuli (6/25) were observed. Reduced maternal weight gain and clinical signs at mid- and high-dose levels resulted in a maternal NOEL of 3.3 mg/kg-day and a developmental NOAEL of 11 mg/kg due to no evidence of developmental toxicity at any dose level tested (Schardein, 1990a).

Schardein (1990b) administered deltamethrin technical (purity of 99.2%) by oral gavage to16 inseminated New Zealand White SPF female rabbits/dose at levels of 10, 25 or 100 mg/kg-day from GD 6 through 15. No dose-related malformations were reported, but variations among the high-dose pups included wrist flexure and retardation of ossification in hyoid body, pubic bones and unossified tail bones resulting in a developmental NOEL = 25 mg/kg based on retardation of bone ossification. Since maternal effects were noted at the high dose, the maternal NOEL was also determined to be 25 mg/kg-day. According to the authors the effects observed did not constitute developmental toxicity (Schardein, 1990b).

As previously described in Section C.2, in the two-generation study by Hoberman (1992) thirty rats/sex/group were dosed in the diet with 0, 5, 20, 80 or 320 ppm of deltamethrin technical (purity: 99.7%). The first generation of parents (P1) were treated with deltamethrin in the diet 82 days prior to mating, during the mating period, for three weeks of gestation and three weeks of lactation. From the offspring, i.e., second generation (F1) animals, 30 per sex/exposure-group were selected as parents and treated for a minimum of 86 days in the premating period, the mating period, for three weeks through the gestation period and for another three weeks through the lactation period.

The mean pup weights at birth for the high dose group in both generations were not significantly different from those of the control group. However, by day 7 of the lactation period, the mean weights of the high dose group pups were less than those of the controls ($p<0.01$). Also, the pups in the 320 ppm treatment group for the second generation (F1) demonstrated increased mortality between days 4 and 21 of lactation, but this was not noted in the F2 group. There were no treatment-related lesions noted in parents of either generation. The authors concluded that the developmental NOEL was 80 ppm (based upon lower mean pup body weights for both generations and increased mortality for the F1 pups during the lactation period in the 320 ppm treatment group).

Richard (2001) dosed pregnant NZW rabbits, 24 does/group, by gavage at 0 (corn oil, 1.5 ml/kg), 3, 10, or 32 mg/kg-day on GD 6 to 28 in a standard developmental toxicity study per FIFRA guidelines. One high dose (32 mg/kg-day) female fetus had cleft palate and another female fetus in the same group from another doe had a missing ulna. No dose-related malformations or variations were noted. In the control group, two animals died while aborting; in the 3 mg/kg-day group 2 animals died and at the 32 mg/kg-day group five animals died (1 after gavage, 2 found dead, 1 while aborting and 1 sacrificed after evidence of abortion). Slight decrements in food consumption and body weight gain in the does at the high dose level were observed from day 6- 21 and the authors determined the maternal NOEL to be 10 mg/kg-day and the developmental NOEL to be 32 mg/kg-day (Richard, 2001).

As noted above in Section E.2.1, in the DNT study (Gilmore et al., 2006), reduced postnatal body weight was noted in the offspring of dams exposed to deltamethrin during gestation through lactation. In these animals, no effect on vaginal patency was reported but the mean age of attainment of preputial separation was delayed 1.6 days in high dose males, apparently associated with the delay in growth equivalent to about one day's body weight.

### *E. 2.2.2. Developmental Toxicity Studies from the Open Literature*

Kavlock et al. (1979) studied the effects of deltamethrin (identified in the study as decamethrin, an alternative name) on development in mice and rats (Kavlock et al., 1979). Deltamethrin dissolved in corn oil was administered by gastric intubation at 0, 3, 6 and 12 mg/kg-day to pregnant CD-1 mice during GD 7-16 in mice and at 0, 1.25, 2.5 and 5 mg/kg-day during GD 7-21 in Sprague-Dawley rats. In mice, a significant ($p<0.01$) dose-related increase in the occurrence of supernumerary ribs was observed with no other skeletal or visceral abnormalities in mice. In the mouse, it appears that two replicate assays were conducted and a reduction in overall fecundity was observed in the first replicate assay (11/15 were pregnant in the control group versus, 4/14, 4/15, and 2/14 in low, mid and high dose groups respectively); but this effect appears to be less when the two replicate assays were combined and reported by the authors as 17/30, 15/30, 10/30 and 9/30 overall (with a decrease to less than 50% in the control group in the second assay). In the rat, the authors reported a dose-related reduction ($p<0.01$) in maternal weight gain during pregnancy with the high dose gaining only 80% of the control group. No evidence of teratogenic activity was found in rats or mice at dose levels that produced marked maternal toxicity, and no persistent toxicity was observed in neonatal rats that received perinatal exposure to deltamethrin. A dose-related depression in growth was observed in the pre-weaning period in the offspring of animals allowed to deliver. Age of eye opening or the age at which the startle or righting reflexes occurred was not affected by treatment.

In a study by Abdel-Khalik et al. (1993), four groups of pregnant rats (20 rats per group) were given either the vehicle (control) or 1, 2.5 or 5 mg/kg-day of deltamethrin orally using a stomach tube, from day 6 to day 15 of pregnancy (Abdel-Khalik et al., 1993). Pregnancy was terminated by killing the animals on the 19th day for fetal examinations. The incidence of early embryonic deaths was higher in deltamethrin-treated rats than in control females. Deltamethrin caused retardation of growth, hypoplasia of the lungs, dilatation of the renal pelvis in the fetuses, as well as an increase in placental weight. No skeletal changes were observed in fetuses recovered from deltamethrin-treated females. The lower dose of deltamethrin used in this study (1 mg/kg BW) was approximately 1/100 the oral $LD_{50}$ in rat and demonstrated a decrease in the average number of live fetuses /dam compared to controls.

Kandil (2006) examined the effects of deltamethrin on fetal developmental and female reproductive endpoints. Deltamethrin was given daily to Sprague-Dawley rats (10/group) by oral intubation in the form of emulsifiable concentrates (5%) at three dose levels of 5.35, 13.38 and 26.75 mg/kg-day from GD 8-16 and to another set of animals from GD 1-20 (Kandil, 2006). Two groups of control animals received distilled water during the same time period. Pregnant rats were sacrificed on GD 20 and the uteri were dissected out and total implantation sites, number of resorptions sites, number of live and dead fetuses per group were noted. Fetuses were examined for external malformations and prepared for examination of skeletal and visceral defects per previously published protocols. A decrease in maternal body weight gain was noted during gestation along with signs of lethargy and a decrease in uterine weight. An increase in the percentage of resorbed fetuses as well as malformed fetuses in a dose-dependent manner was noted. Other effects included a decrease in average body weight of the fetuses along with incomplete ossification. Statistical analysis of the data was not presented. Only summary data and brief descriptions of experimental methodology were available for evaluation by OEHHA.

Lazarini et al. (2007) examined the relationship between deltamethrin maternal exposure (0.08 mg/kg orally via gavage) during GD6-GD15 in rats and the occurrence of prenatal and postnatal physical alterations. No skeletal and visceral effects were observed. However, a delay in the day of eyes opening for both male and female offspring exposed was observed. In addition, the females presented early vaginal channel opening.

One study is not fully summarized here because it was published only as an abstract. Husain et al. (1991) exposed rat dams to deltamethrin and reported reduced birth weight and growth rate in pups, along with other effects, suggesting to the authors that deltamethrin adversely affects morphogenesis, growth, maturation, and function of the brain, and causes perturbations in maturation profiles of specific neuronal cell populations.

## E.3. Summary of Developmental Effects Seen in Animal Studies

**Table 7. Neurodevelopmental Effects**

| REFERENCE | SPECIES/STUDY DESIGN | EFFECTS | COMMENTS |
|---|---|---|---|
| Gilmore et al., 2006 | Rats Developmental Neurobehavioral Test GD 6-PND 21<br>In diet 0, 20,80 or 200 ppm | ↓ Post-natal body weight, ↓ fixed female brain weight resistance at termination and ↑ resistance at removal with vocalization at 200 ppm | |
| Aziz et al., 2001 | Rat/Perinatal Neurodevelopmental Oral; GD 14-20; 1mg/kg-day | Alterations in biochemical and behavioral parameters | Cholinesterase activity, ↓ in cholinergic receptors in hippocampus, and ↓ in learning and memory performance observed at both 6 and 12 weeks age |
| Lazarini et al., 2001 | Rat/Prenatal Neurodevelopmental Oral, GD 6-15; 0.08 mg/kg-day | Emotionality as demonstrated by decreased locomotion frequency and the increased immobility in open field and reduced latency to float in response to swimming test | At PND 60, an anxiogenic swimming procedure followed by open-field behavior testing indicated treated male rats having a significantly ↑ in emotional state |
| Johri et al., 2006a | Rat/Prenatal (GD 5-21) Oral; 0, 0.25, 0.5 or 1.0 mg/kg | CYP alterations (↑ expression); ↓spontaneous locomotor activity | |

**Table 7. Neurodevelopmental Effects (continued)**

| | | | |
|---|---|---|---|
| Johri et al., 2006b | Rat/Prenatal (GD 5-21) Oral; 0, 0.25, 0.5 or 1.0 mg/kg | Effects on the ontogeny of CYPs which in turn are associated with physiological functions of the brain. Persistent effects | Dams were not solely exposed to deltamethrin but an emulsion that contains 2.8% technical grade deltamethrin and 97.2% unknown inerts and so some of the "inerts" may be responsible for the upregulation of P450s |

**Table 8. Developmental Studies**

| REFERENCE | SPECIES/STUDY DESIGN | EFFECTS | COMMENTS |
|---|---|---|---|
| Kavlock et al., 1979 | Rat-0, 1.25, 2.5 and 5 mg/kg-day<br>Mouse- 0, 3, 6 and 12 mg/kg-day<br>Prenatal – oral gavage | No adverse effects | |
| Hoberman, 1992 | Rat – Two generation In diet 0, 5, 20, 20, 80 or 320 ppm Premating through day 21 of lactation | Developmental NOEL = 80 ppm (↓pup bodyweight at 320 ppm in both generations and ↑pup mortaility for F1 pups during lactation period at 320 ppm | |
| Schardein, 1990a | Rats oral gavage 0, 1, 3.3 7, 11 mg/kg-day GD 6-15 | No adverse effects observed | |

**Table 8. Developmental Studies (continued)**

| | | | |
|---|---|---|---|
| Schardein, 1990b | NZW Rabbits oral; 0,10, 25 and 100 mg/kg-day GD 6-28 | ↑Mortality at high dose in dams, retardation of bone ossification in offspring | |
| Richard, 2001 | Rabbits oral; GD 6-28 0, 3, 10 and 32 mg/kg-day | ↓Body weight and food consumption in does, no adverse developmental effects | |
| Abdel-Khalik et al., 1993 | Rat/Prenatal1, 2.5 or 5 mg/kg BW oral; (GD) 6 -15 | Growth retardation, hypoplasia of the lungs, dilatation of the renal pelvis and ↑ placental weight | |
| Kandil, 2006 | Rat/Prenatal Oral; 0, 5.35, 13.38 and 26.75 mg/kg-day Group 1: GD 8-16<br>Group 2: GD 1-20 | ↓ Maternal body weight gain, lethargy ↓ uterine weight ↑ resorptions and malformed fetuses<br>↓ fetal body weight incomplete ossification in fetuses | Statistical analysis of the data was not presented in the report. Only summary data and brief descriptions of experimental methodology were available for evaluation |
| Gilmore et al., 2006 | Rats Developmental Neurobehavioral Test GD 6-PND 21<br>In diet 0, 20,80 or 200 ppm | Delay in age of preputial separation in male offspring at 200 ppm | |
| Lazarini et al., 2007 | Rat/Prenatal; Oral, GD 6-15; 0.08 mg/kg-day | Delay in eye opening and acceleration of vaginal opening | Involvement of EGF |

## E.4. Integrative Evaluation of Developmental Toxicity of Deltamethrin

The developmental neurotoxicity study in rats included exposure during the prenatal and postnatal period and demonstrated adverse effects such as significantly reduced fixed female brain weight in F1 rats at termination and increased resistance at removal with vocalization in males at the high dose group of 200 ppm (Gilmore et al., 2006). However no adverse effects were noted for auditory startle habituation, learning and memory (passive avoidance after weaning and water maze task). This along with data on other pyrethroids has led the U.S. EPA to conclude that the DNT is not a particularly sensitive study for evaluating comparative sensitivity of young animals to adults for this class of chemicals (Scollon, 2010). However greater sensitivity of pups compared to adults for lethal doses of deltamethrin has been demonstrated in an acute toxicity study (Sheets et al., 1994). In other studies in rats, maternal exposure during the organogenesis period resulted in decreased locomotion frequency and the increased immobility observed in male rats prenatally exposed to deltamethrin have been interpreted by the authors as consequences of high levels of emotionality induced by the prenatal exposure to the pyrethroid (Lazarini et al., 2001). These findings along with other studies (Aziz et al., 2001; Johri et al., 2006a; Johri et al., 2006b) suggest that prenatal exposure to a low dose of deltamethrin may cause alterations in offspring motor and dopaminergic activity systems as well as perturbations in biochemical parameters, which are effects that are not examined in guideline studies.

One of the rat studies examining neurodevelopmental endpoints included exposures during the postnatal period (Gilmore et al., 2006). Given the relatively altricial state at which rat pups are born, exposure during PND 1–10 in the rat pup has been considered equivalent to a continuous *in utero* exposure in humans in terms of brain development. Hence, in addition to prenatal exposure, the next most relevant exposure scenario would be lactational exposure (PND 1-21) following dietary exposure of the dams, as this scenario would provide an opportunity for continuous exposure as would occur *in utero* for humans. Lactational exposure may also be relevant for premature infants. To better understand the neurotoxic effects of diverse hazards on the developing human nervous system, researchers and clinicians rely on data collected from a number of model species that develop and mature at varying rates (Clancy et al., 2007). The findings from evolutionary and developmental biology show that the timing and sequence of early events in brain development are remarkably conserved across mammals (Finlay et al., 1995) and form the basis for generalization across species. It is estimated that the rat brain at PND 1–10 equates to the third trimester in humans, or that rat neurodevelopment at PND 7 is equivalent to that of the human brain at birth (Andrews et al., 1997; Dobbing et al., 1979). Another study suggests that PND 2–7 in rat corresponds to the human third trimester, and translates the human day of birth to rat PND 12–13 (Romijn et al., 1991). Overall, exposure during the early postnatal period in rodents appears to be relevant to human neurodevelopment. This is important in considering the

relevance of postnatal data since Proposition 65 limits consideration of developmental toxicity to effects resulting entirely or predominantly from prenatal exposures.

Several studies examining the effect of deltamethrin exposure in utero on other (non-neurodevelopmental) endpoints laboratory animal species *in utero* are also available. Some of these were FIFRA studies submitted for regulatory purposes of pesticide registration, and in general reported no adverse developmental effects.

The mean age of attainment of preputial separation of male pups was delayed at maternal exposure to 200 ppm deltamethrin in the diet in the developmental neurotoxicity study in rats where the parameter was evaluated (Gilmore et al., 2006). A subsequent study in the rat reported a decrease in maternal body weight gain during gestation with signs of lethargy and a decrease in uterine weight, and an increase in the percentage of resorbed fetuses as well as malformed fetuses in a dose-dependent manner along with a decrease in average body weight of the fetuses and incomplete ossification (Kandil, 2006). In other studies in rats, maternal exposure during the organogenesis period resulted in a delay in the day of eyes opening for male and early vaginal channel opening in female offspring (Lazarini et al., 2007). Additionally, according to Lazarini et al., 2007, findings from other researchers have demonstrated that administration of epidermal growth factor (EGF) to newborn mice accelerates eye opening as well as delays vaginal opening, hence it is possible that the delay in eye opening and hastening of the vaginal opening noted after exposure to deltamethrin could be a result of inhibition of the expression of EGF. Because there was no other evidence of general developmental delay the authors suggested this to be a specific effect of deltamethrin on this physical landmark.

## F. References


Abd el-Aziz, MI, AM Sahlab and M Abd el-Khalik (1994). "Influence of Diazinon and Deltamethrin on Reproductive Organs and Fertility of Male Rats." DTW. Deutsche tierarztliche Wochenschrift 101(6): 230-232.

Abdel-Khalik, MM, MS Hanafy and MI Abdel-Aziz (1993). "Studies on the Teratogenic Effects of Deltamethrin in Rats." DTW. Deutsche tierarztliche Wochenschrift 100(4): 142-143.

Ahn, KC, SJ Gee, HJ Kim, PA Aronov, H Vega, RI Krieger and BD Hammock (2011). "Immunochemical Analysis of 3-Phenoxybenzoic Acid, a Biomarker of Forestry Worker Exposure to Pyrethroid Insecticides." Anal Bioanal Chem 401( (4)): 1285-1293.

Aliverti, V, L Bonanomi, E Giavani, VG Leone and L Mariani (1979). "Extent of Fetal Ossification as an Index of Delayed Development in Teratogenic Studies on the Rat." Teratology, 20: 237-242.

Andrade, AJ, S Araujo, GM Santana, M Ohi and PR Dalsenter (2002). "Reproductive Effects of Deltamethrin on Male Offspring of Rats Exposed During Pregnancy and Lactation." Regulatory Toxicology and Pharmacology : RTP 36(3): 310-317.

Andrews, K and M Fitzgerald (1997). "Biological Barriers to Paediatric Pain Management." Clin J Pain 13(2): 138-143.

ATSDR. (2003). Agency for Toxic Substances and Disease Registry. Toxicological Profile for Pyrethrins and Pyrethroids. U.S. Department of Health and Human Services. from http://atsdr.cdc.gov/toxprofiles/tp155.html.

Aziz, MH, AK Agrawal, VM Adhami, Y Shukla and PK Seth (2001). "Neurodevelopmental Consequences of Gestational Exposure (Gd14-Gd20) to Low Dose Deltamethrin in Rats." Neuroscience Letters 300(3): 161-165.

Ben Abdallah, F, AB Slima, I Dammak, L Keskes-Ammar and Z Mallek (2009). "Comparative Effects of Dimethoate and Deltamethrin on Reproductive System in Male Mice." Andrologia 42(3): 182-186.

Ben Abdallah, F, K Hamden, I Galeraud-Denis, A El Feki and L Keskes-Ammar (2010). "An in Vitro Study on Reproductive Toxicology of Deltamethrin on Rat Spermatozoa." Andrologia 42(4): 254-259.

Ben Slima, A, F Ben Abdallah, L Keskes-Ammar, Z Mallek, A El Feki and R Gdoura (2012). "Embryonic Exposure to Dimethoate and/or Deltamethrin Impairs Sexual Development and Programs Reproductive Success in Adult Male Offspring Mice." Andrologia 44 Suppl 1: 661-666.

Bradberry, SM, SA Cage, AT Proudfoot and JA Vale (2005). "Poisoning Due to Pyrethroids." Toxicological Reviews 24(2): 93-106.

Burr, SA and DE Ray (2004). "Structure-Activity and Interaction Effects of 14 Different Pyrethroids on Voltage-Gated Chloride Ion Channels." Toxicological Sciences 77(2): 341-346.

California Department of Pesticide Regulation. (2000). Deltamethrin: Risk Characterization Document. from http://www.cdpr.ca.gov/docs/risk/rcd/deltameth.pdf.

California Department of Pesticide Regulation. (2012). Calpiq Database Query for Delatmethrin. Http://Apps.Cdpr.Ca.Gov/Calpiq/Calpiq_Input.Cfm.

Chauhan, LK, M Kumar, BN Paul, SK Goel and SK Gupta (2007). "Cytogenetic Effects of Commercial Formulations of Deltamethrin and/or Isoproturon on Human Peripheral Lymphocytes and Mouse Bone Marrow Cells." Environmental and Molecular Mutagenesis 48(8): 636-643.

Clancy, B, BL Finlay, RB Darlington and KJ Anand (2007). "Extrapolating Brain Development from Experimental Species to Humans." Neurotoxicology 28(5): 931-937.

Crofton, KM, JA Harrill and MJ Wolansky (2007). "Comments On: Effect of Prenatal Exposure of Deltamethrin on the Ontogeny of Xenobiotic Metabolizing Cytochrome P450s in the Brain and Liver of Offsprings [Johri Et Al. Toxicol Appl Pharmacol. 214:279-289, 2006]." Toxicology and applied pharmacology 218(1): 96-97; author reply 98.

Dobbing, J and J Sands (1979). "Comparative Aspects of the Brain Growth Spurt " Early Hum Dev 3(1): 79-83.

El-Gohary, M, WM Awara, S Nassar and S Hawas (1999). "Deltamethrin-Induced Testicular Apoptosis in Rats: The Protective Effect of Nitric Oxide Synthase Inhibitor." Toxicology 132(1): 1-8.

EXTOXNET. (1995). Pesticide Information Profile:Deltamethrin 2012, from http://pmep.cce.cornell.edu/profiles/extoxnet/carbaryl-dicrotophos/deltamethrin-ext.html.

Finlay, BL and RB Darlington (1995). " Linked Regularities in the Development and Evolution of Mammalian Brains. ." Science. 268(5217): 1578-1584.

Gammon, DW, A Chandrasekaran and SFwro Elnaggar (2012). Comparative Metabolism and Toxicology of Pyrethroids in Mammals. Issues in Toxicology No. 12 Mammalian Toxicology of Insecticides. T. C. Marrs, The Royal Society of Chemistry

Gilmore, RG, LP Sheets and HE Hoss (2006). A developmental neurotoxicity screening study with technical grade deltamethrin in Wistar rats. Stilwell, Kansas 66085-9104, Bayer CropScience LP Toxicology.

Hoberman, AM (1992). Deltamethrin: Reproductive Effect of Deltamethrin Administered Orally in the Diet to Crl:Cdbr Vaf/Plus Rats for Two Generations Project Id. 818-001. Horsham, PA, Argus Research Laboratories, Inc. 136.

Husain, R and P Seth (1991). "Neurotoxic Effects of Deltamethrin, a Synthetic Pyrethroid During Early Development in Rats." International Journal of Toxicology, Occupational and Environmental Health. 1(1): 138.

Ismail, MF and HM Mohamed (2012). "Deltamethrin-Induced Genotoxicity and Testicular Injury in Rats: Comparison with Biopesticide." Food and Chemical Toxicology 50(10): 3421-3425.

Issam, C, H Samir, H Zohra, Z Monia and BC Hassen (2009). "Toxic Responses to Deltamethrin (Dm) Low Doses on Gonads, Sex Hormones and Lipoperoxidation in Male Rats Following Subcutaneous Treatments." The Journal of Toxicological Sciences 34(6): 663-670.

Johri, A, A Dhawan, RL Singh and D Parmar (2006a). "Effect of Prenatal Exposure of Deltamethrin on the Ontogeny of Xenobiotic Metabolizing Cytochrome P450s in the Brain and Liver of Offspring." Toxicol. Appl. Pharmacol. 214: 279-289.

Johri, A, S Yadav, RL Singh, A Dhawan, M Ali and D Parmar (2006b). "Long Lasting Effects of Prenatal Exposure to Deltamethrin on Cerebral and Hepatic Cytochrome P450s and Behavioral Activity in Rat Offspring." European Journal of Pharmacology 544(1-3): 58-68.

Kandil, AM (2006). "Toxic Effects of Deltamethrin on the Pregnant Rats and Their Fetuses." J. Drug Res. 27: 82-89.

Kavlock, R, N Chernoff, R Baron, R Linder, E Rogers, B Carver, J Dilley and V Simmon (1979). "Toxicity Studies with Decamethrin, a Synthetic Pyrethroid Insecticide." Journal of Environmental Pathology and Toxicology 2(3): 751-765.

Kegley, SE, Hill, B.R., Orme S., Choi A.H. (2010). Deltamethrin - Identification, Toxicity, Use, Water Pollution Potential, Ecological Toxicity and Regulatory Information. Pesticide Action Network. from http://www.pesticideinfo.org/Detail_Chemical.jsp?Rec_Id=PC33475.

Lazarini, CA, JC Florio, IP Lemonica and MM Bernardi (2001). "Effects of Prenatal Exposure to Deltamethrin on Forced Swimming Behavior, Motor Activity, and Striatal Dopamine Levels in Male and Female Rats." Neurotoxicology and Teratology 23(6): 665-673.

Lazarini, CA, IP Lemonica, SF Habr and MM Bernardi (2007). "Prenatal Deltamethrin Low Dose Effects on Physical Development of Rats." Pesticidas 17: 47-58.

Leake, LD, DS Buckley, MG Ford and DW Salt (1985). "Comparative Effects of Pyrethroids on Neurons of Target and Non-Target Organisms." Neurotoxicology 6(2): 99-116.

Lemos, AJJM, V Wanderley-Teixeira, AAC Teixeira, FdCA Silva, JV Oliveira and HAA de Siqueira (2011). "Response of Blastocyst-Endometrium Interactions in Albino Rats to Sublethal Doses of Biological and Synthetic Insecticides." Food and Chemical Toxicology 49(10): 2541-2547.

Lemos, AJ, HA Siqueira, V Wanderley-Teixeira, FC Maia, AA Teixeira, EJ Silva and JV Oliveira (2012). "Effect of Sub-Lethal Doses of Bacillus Thuringiensis Subsp. Aizawai and Deltamethrin with Regard to Fertility and Organ Toxicity in Pregnant Albino Rats." Experimental and Toxicologic Pathology.

National Pesticide Information Center. (2012). Technical Fact Sheet. National Pesticide Information Center., from http://npic.orst.edu/factsheets/Deltatech.html.

Oda, SS and ZK El-Maddawy (2011). "Protective Effect of Vitamin E and Selenium Combination on Deltamethrin-Induced Reproductive Toxicity in Male Rats." Exp Toxicol Pathol.

OEHHA. (2007). Office of Environmental Health Hazard Assessment. Child-Specific Reference Doses (Chrds) for Atrazine and Deltamethrin.http://www.oehha.ca.gov/public_info/public/kids/pdf/atrazinedeltramethrin100407.pdf.

Ray, DE and JR Fry (2006). "A Reassessment of the Neurotoxicity of Pyrethroid Insecticides." Pharmacology & Therapeutics 111(1): 174-193.

Richard, J (2001). Deltamethrin: Prenatal Developmental Toxicity Study by Oral Route (Gavage) in Rabbits. Evreaux, France, CIT

Romijn, HJ, MA Hofman and A Gramsbergen (1991). "At What Age Is the Developing Cerebral Cortex of the Rat Comparable to That of the Full-Term Newborn Human Baby?" Early Hum Dev 26(1): 61-67.

Salem, MH, Z Abo-Elezz, GA Abd-Allah, GA Hassan and N Shaker (1988). "Effect of Organophosphorus (Dimethoate) and Pyrethroid (Deltamethrin) Pesticides on Semen Characteristics in Rabbits." Journal of Environmental Science and Health. Part. B, Pesticides, Food Contaminants, and Agricultural Wastes 23(3): 279-290.

Schardein, JL (1990a). Developmental Toxicity Study of Deltamethrin in Rats. Mattawan, MI, International Research and Development Corporation (IRDC).

Schardein, JL (1990b). Developmental Toxicity Study of Deltamethrin in New Zealand White Rabbits. Mattawan, MI., International Research and Development Corporation (IRDC)

Scollon, E (2010). Memorandum: From Edward Scollon to Cathryn Oconnell. Subject: Pyrethroids: Evaluation of Data from Developmental Neurotoxicity Studies and Consideration of Comparative Senstivity., US Environmental Protection Agency**:** 36.

Sekeroglu, V, ZA Sekeroglu and ES Demirhan (2012). "Effects of Commercial Formulations of Deltamethrin and/or Thiacloprid on Thyroid Hormone Levels in Rat Serum." Toxicology and Industrial Health.

Shafer, TJ, DA Meyer and KM Crofton (2005). "Developmental Neurotoxicity of Pyrethroid Incecticides: Critical Review and Future Research Needs." Environmental Health Perspectives 113: 123-136.

Sheets, LP, JD Doherty, MW Law, LW Reiter and KM Crofton (1994). "Age-Dependent Differences in the Susceptibility of Rats to Deltamethrin." Toxicology and Applied Pharmacology 126(1): 186-190.

Shukla, Y and P Taneja (2000). "Mutagenic Evaluation of Deltamethrin Using Rodent Dominant Lethal Assay." Mutation Research 8;467(2): 119-112.

Shukla, Y, A Arora and A Singh (2001). "Tumourigenic Studies on Deltamethrin in Swiss Albino Mice." Toxicology 163(1): 1-9.

Soderlund, DM, JM Clark, LP Sheets, LS Mullin, VJ Piccirillo, D Sargent, JT Stevens and ML Weiner (2002). "Mechanisms of Pyrethroid Neurotoxicity: Implications for Cumulative Risk Assessment." Toxicology 171(1): 3-59.

Staples, RE and VL Schnell (1964). "Refinements in Rapid Techniques in the Koh Alizarin Red S Method for Fetal Bone." Stain Technology 39: 61-64.

Tornero-Velez, R, A Mirfazaelian, KB Kim, SS Anand, HJ Kim, WT Haines, JV Bruckner and JW Fisher (2010). "Evaluation of Deltamethrin Kinetics and Dosimetry in the Maturing Rat Using a Pbpk Model." Toxicology and Applied Pharmacology 244(2): 208-217.

U.S. EPA. (1997). Notice of Filing of Pesticide Petitions: Deltamethrin. Federal Register, from http://www.gpo.gov/fdsys/pkg/FR-1997-04-30/pdf/97-11020.pdf.

U.S. EPA. (2004). Pesticide Tolerance: Deltamethrin. Federal Register, from http://www.gpo.gov/fdsys/pkg/FR-2004-10-27/pdf/04-24040.pdf.

U.S. EPA. (2010). Deltamethrin Summary Document Registration Review: Initial Docket, March 2010 Case # 7414 Docket Number: Epa-Hq-Opp-2009-0637 United States Environmental Protection Agency, from http://www.regulations.gov/#!documentDetail;D=EPA-HQ-OPP-2009-0637-0002.

Wilson, JG, Ed. (1965). Methods for Administering Agents and Detecting Malformations in Experimental Animals. Teratology: Principles and Techniques. Chicago, University of Chicago Press.

Wrenn, J (1980). Three Generation Reproduction Study in Rats. CDPR. Mattawan, IRDC Study.

## Appendix

In this appendix, the animal toxicological studies discussed in the main document are summarized and arranged in alphabetical order by the first author's last name and year of publication.

Abd El-Aziz et al., 1994.....48

Abdel-Khalik et al., 1993.....50

Andrade et al., 2002.....51

Aziz et al., 2001.....54

Ben Abdallah et al., 2009.....57

Ben Abdallah et al., 2010.....59

Ben Slima et al., 2012.....59

Crofton et al., 2007.....63

El-Gohary et al., 1999.....63

Gilmore et al., 2006.....66

Hoberman, 1992.....69

Husain and Seth, 1991.....78

Issam et al., 2009.....79

Johri et al., 2006a.....79

Johri et al., 2006b.....80

Kandil, 2006.....83

Kavlock et al., 1979.....86

Lazarini et al., 2001.....90

Lazarini et al., 2007.....92

Lemos et al., 2011.....94

Lemos et al., 2012.....96

Oda and El-Maddawy, 2011.....97

Richard, 2001. .....100

Salem et al., 1988. .....100

Schardein, 1990a. .....101

Schardein, 1990b. .....101

Shukla and Taneja, 2000. .....102

Wrenn, 1980. .....105

***Abd El-Aziz et al., 1994. Influence of deltamethrin on reproductive organs and fertility of male rats.***

In this study, the effects of deltamethrin and diazinon on male reproductive tissues were studied at two dosage levels. Deltamethrin was administered at 1 or 2 mg/kg BW (1/100$^{th}$ $LD_{50}$ and 1/50$^{th}$ $LD_{50}$, respectively) to 75 mature male rats (Abd el-Aziz et al., 1994). The tested doses were given orally to male rats for 65 consecutive days to cover a complete spermatogenic cycle. The first male group served as the control and was treated orally with distilled water (0.5 ml/rat/day). At the end of the administration period, 5 male rats from each group were isolated in a separate cage. Each male rat in the control and treated group was paired separately with a female (untreated) for 48 hours to determine conception rate. In addition, 5 male rats from each group were left for 60 days without treatment and were mated as described to determine whether the effect was temporary or permanent. Females were not treated. Blood samples were collected before and after exposure to the test chemicals at 14, 28, 42 and 65 days and 21 days after stopping chemical exposure. The serum from this collection was assayed for testosterone via radioimmunoassay method. Analysis of weight of testes, epididymis, seminal vesicles and prostate glands as well as semen picture (% motility and presence of abnormalities as illustrated in the data table), testosterone levels and the conception rate were the criteria used to evaluate the reproductive efficiency of the treated rats.

**Table A1. Effect of prolonged administration of diazinon at doses of 1.5 and 3 mg/kg and deltatmethrin at doses of 1 and 2 mg/kg for 65 consecutive days and 21 days after stopping administration (A) on weights of sex organs of male rats (n=5).**

| Weights of Sex Organs (g) | | | | | |
|---|---|---|---|---|---|
| Parameter(s): | | Diazinon | | Deltamethrine | |
| | Control | 1.5 mg/kg | 3 mg/kg | 1 mg/kg | 2 mg/kg |
| Testicles | 1.75±0.05 | 1.38±0.05** | 1.16±0.032*** | 1.42±0.02*** | 1.25±0.043*** |
| A | 1.68±0.025 | 1.47±0.04** | 1.20±0.033** | 1.44±0.03*** | 1.29±0.014*** |
| Seminal Vesicles | 0.23±0.014 | 0.16±0.008** | 0.12±0.014*** | 0.15±0.0015** | 0.10±0.015*** |
| A | 0.24±0.015 | 0.17±0.006** | 0.13±0.013*** | 0.15±0.017** | 0.12±0.012*** |
| Prostate Gland | 00.19±0.014 | 0.12±0.008** | 0.09±0.002*** | 0.11±0.009** | 0.08±0.008*** |
| A | 0.19±0.016 | 0.14±0.009* | 0.12±0.003** | 0.13±0.007** | 0.11±0.007** |

* Significant at p<0.05, ** Significant at p<0.01, *** Significant at p<0.001

**Table A2. Effect of prolonged administration of diazinon at doses of 1.5 and 3 mg/kg and deltratmethrin at doses of 1 and 2 mg/kg for 65 consecutive days and 21 days after stopping administration (A) on the semen picture of male rats (n=5).**

| Semen Picture | | | | | |
|---|---|---|---|---|---|
| Parameter(s): | | Diazinon | | Deltamethrine | |
| | Control | 1.5 mg/kg | 3 mg/kg | 1 mg/kg | 2 mg/kg |
| Sperm Concentration | 1.90±0.18 | 1.30±0.064* | 0.92±0.08** | 1.15±0.089** | 0.84±0.04*** |
| A | 1.91±0.19 | 1.44±0.068* | 1.22±0.09** | 1.31±0.13* | 1.05±0.064** |
| Live Sperm % | 97.89±1.84 | 83.74±1.42*** | 80.22±1.04*** | 77.04±0.48*** | 73.78±1.42*** |
| A | 98.22±1.96 | 86.42±1.84** | 86.47±1.79** | 83.16±0.78** | 80.43±0.87*** |
| Motility % | 95.82±0.72 | 17.24±0.85*** | 7.41±0.64*** | 15.80±0.94*** | 6.74±0.58*** |
| A | 96.46±0.85 | 27.96±2.14*** | 17.22±1.98*** | 25.42±2.98*** | 14.88±2.10*** |
| Total Abnormalities | 7.68±0.32 | 22.86±1.17*** | 42.28±1.68*** | 27.64±1.27*** | 36.72±1.84*** |
| A | 8.24±0.42 | 18.37±06.2*** | 30.02±0.79*** | 21.64±0.58*** | 28.20±0.87*** |

* Significant at p<0.05, ** Significant at p<0.01, *** Significant at p<0.001

**Table A3. Plasma testosterone (ng/ml) levels of male rats administered diazinon at doses of 1.5 and 3 mg/kg and deltratmethrin at doses of 1 and 2 mg/kg for 65 consecutive days and 21 days after stopping administration (n=5) (Mean ± S.E.).**

| Plasma testosterone concentration (ng/ml) | | | | | |
|---|---|---|---|---|---|
| Time of Sampling (days): | | Diazinon | | Deltamethrine | |
| | Control | 1.5 mg/kg | 3 mg/kg | 1 mg/kg | 2 mg/kg |
| 0 | 3.37±0.09 | 3.48±0.082 | 3.56±0.06 | 3.68±0.014 | 3.62±0.09 |
| 14 | 3.66±0.07 | 3.20±0.09** | 3.08±0.06*** | 3.40±0.111* | 2.98±0.08*** |
| 28 | 3.58±0.07 | 3.16±0.08** | 2.76±0.07*** | 3.20±0.120** | 2.39±0.07*** |
| 42 | 3.67±0.05 | 2.48±0.10*** | 2.22±0.09*** | 2.72±0.08*** | 2.18±0.04*** |
| 65 | 3.68±0.04 | 2.40±0.09*** | 1.83±0.09*** | 2.62±0.06*** | 1.76±0.05*** |
| 21 days after end of treatment | 3.56±0.06 | 2.34±0.07*** | 1.98±0.08*** | 2.66±1.07*** | 2.07±0.05*** |

* Significant at P<0.05, ** Significant at P<0.01, *** Significant at P<0.001

Both doses of diazinon and deltamethrin decreased the weights of most male reproductive organs and motility of spermatozoa. Also, an increase in the percentage of dead and morphologically abnormal spermatozoa of treated rats was noted. A decrease in the plasma testosterone level was observed in all treated groups. According to the authors, "…the decrease in epididymal sperm characters could be explained by the degenerative changes seen in testicular and accessory gland structures or by the decrease of testosterone concentration and these effects could impair or even stop the process of spermatogenesis".

Oral administration of diazinon and deltamethrin for 65 consecutive days decreased the conception rate in non-treated females (mated with treated males) as presented in Table A4.

**Table A4. Effect of deltamethrin administration on male fertility (n=8)**

| | Control | Deltamethrin | | | |
|---|---|---|---|---|---|
| | | 1 mg/kg | | 2 mg/kg | |
| | | A | B | A | B |
| Number of female rats | 8 | 8 | 8 | 8 | 8 |
| Number of pregnant rats | 6 | 3 | 3 | 3 | 2 |
| Percentage of pregnancy | 75 | 37.5 | 37.5 | 37.5 | 25 |
| A: After 65 days of administration | | | | | |
| B: 60 days after stopping administration | | | | | |

***Abdel-Khalik et al., 1993. Studies on the teratogenic effects of deltamethrin in rats***

In this study, four groups of pregnant rats (20 rats each) were given either the vehicle (control) or doses of 1, 2.5 or 5 mg/kg BW of deltamethrin orally from day 6 to day 15 of pregnancy. Animals were killed on the 19th day for fetal

examinations (Abdel-Khalik et al., 1993). The incidence of early embryonic deaths was higher in deltamethrin-treated rats than in control females. Deltamethrin caused retardation of growth, hypoplasia of the lungs, dilatation of the renal pelvis and increase in placental weight. No skeletal changes were observed in fetuses recovered from deltamethrin-treated females.

**Table A5. Effects of deltamethrin on rat fetuses**

| Dose (mg/kg bw) | 0 | 1 | 2.5 | 5 |
|---|---|---|---|---|
| PARAMETERS | Mean ± SD | | | |
| Tot. # of pregnant animals examined | 20 | 20 | 20 | 20 |
| Tot. # of implantation sites recorded in 20 rats | 191 | 182 | 189 | 184 |
| Avg. # of implantation sites per rat | 9.5±1.3 | 9.1±1.7 | 9.4±1.8 | 9.2±1.7 |
| Tot. # of living fetuses recovered from 20 rats | 178 | 160 | 147 | 110 |
| Avg. # of living fetuses per rat | 8.9±0.9 | 8±1.3** | 7.3±1.1** | 5.5±2.1** |
| Post-implantation loss (%) | 6.8 | 12.1 | 22.2 | 40.2 |
| Mean fetal weight (g) | 4.4±0.1 | 4.0±0.1** | 3.8±0.1** | 3.5±0.2** |
| Mean fetal length (cm) | 3.8±0.05 | 3.4±0.07** | 3.3±0.05** | 3.2±0.05** |
| Tot. # and (%) of fetuses showing hypoplasia of lungs | 0 (0%) | 0 (0%) | 5 (3.4%) | 10 (9.1%) |
| Tot. # and (%) of fetuses showing dilatation of renal pelvis | 0 (0%) | 0 (0%) | 15 (10.2%) | 26 (23.6%) |
| Tot. # of fetuses showing skeletal abnormalities | 0 | 0 | 0 | 0 |
| Mean weight of placenta (g) | 0.44±0.03 | 0.57±0.02** | 0.57±0.02** | 0.62±0.02** |

** $p<0.01$

The authors reported that deltamethrin caused dose-dependent early embryonic death (postimplantation loss) leading to complete resorptions as evidenced in the table above. Dose-related retardation of growth was also observed in delatamethrin treated fetuses compared to fetuses in the control group. The lower dose of deltamethrin used in this study (1 mg/kg/BW) is approximately 1/100 the oral $LD_{50}$ in rat. According to the authors, although deltamethrin is relatively safe, its effects on the fetus should be considered when used on pregnant animals or in environments where pregnant animals and women live.

***Andrade et al., 2002. Reproductive effects of deltamethrin on male offspring of rats exposed during pregnancy and lactation***

The effects of low doses of deltamethrin administered to female rats on the reproductive system of male offspring were examined. Dams (n=10-12/group) were treated daily by oral gavage with 0, 1.0, 2.0, or 4.0 mg deltamethrin/kg from

day 1 of pregnancy to day 21 of lactation. Maternal and reproductive outcome data and male sexual development landmarks were assessed (Andrade et al., 2002).

The age at testis descent and preputial separation were assessed. Determination of the age at testis descent was monitored starting on PND 15 and every day thereafter until the testis descent had been completed in all offspring. The age at preputial separation was monitored starting on PND 33 and every day thereafter until completion of preputial separation in all males had been achieved. Only the day of full separation of the prepuce from the foreskin was recorded and used in the analysis for the age of preputial separation. The developmental landmarks were studied in all male offspring. Anogenital distances were not measured. For the fertility study, deltamethrin-treated and control male rats (120 days old) were mated overnight with unexposed regular-cycling females (1:2). One week after the fertility study, the same male rats were used to assess the effects of deltamethrin on sexual behavior. The sexually-experienced males were mated with unexposed females in heat (1:1). Animals were filmed for 30 min during the dark period under dim red illumination and each male was evaluated separately for several parameters. Fertility, sexual behavior, and a large number of reproductive endpoints, such as organ weights of reproductive system (absolute and relative), sperm evaluations, testosterone concentration, and testicular histology were examined for adult male offspring. The male offspring rats (*n*=16 per group) were killed by decapitation on PNDs 150–180, (when animals had all achieved sexual maturity) having been previously evaluated in fertility and behavioral studies. The testis, epididymis, ventral prostate, and seminal vesicle (with coagulating glands) were removed and weighed.

Maternal toxicity was not detected at the dose levels tested. Significant adverse effects were seen only on testicular and epididymal absolute weights and the diameter of seminiferous tubules in the group treated with the highest dose of deltamethrin (4.0 mg/kg) as noted in Tables A6 and A7 below.

**Table A6. Effects of *In Utero* and Lactational Deltamethrin Exposure on Absolute and Relative (%) Organ Weights of Adult Male Offspring Rats**

| Weight(s): | Deltamethrin (mg/kg)[B] | | | |
|---|---|---|---|---|
| | 0 | 1 | 2 | 4[c] |
| Body weight (g)[A] | 363±33 | 357±24 | 361±39 | 351±42 |
| Testis (g)[A] | 1.47±0.12 | 1.42±0.11 | 1.47±0.12 | 1.31±0.13** |
| (%) | (0.41±0.03) | (0.40±0.04) | (0.41±0.04) | (0.38±0.06) |
| Epididymis (mg)[A] | 563±42 | 543±54 | 536±43 | 509±46* |
| (%) | (0.16±0.04) | (0.15±0.02) | (0.15±0.1) | (0.14±0.02) |
| Prostate (mg)[A] | 526±123 | 501±95 | 470±183 | 449±145 |
| (%) | (0.15±0.04) | (0.14±0.03) | (0.13±0.04) | (0.13±0.04) |
| Seminal vesicle (mg)[A] | 706±115 | 729±92 | 687±146 | 645±115[D] |
| (%) | (0.20±0.03) | (0.20±0.03) | (0.19±0.03) | (0.18±0.04)[D] |

[A] 16 animals/dose levels were used ([c]15 animals; [D]14 animals).
[B] Mean ± Standard Deviation.
* Significantly different from control group (p<0.05;
** Significantly different from control group p<0.01; ANOVA-Tukey)

**Table A7. Effects of *in Utero* and Lactational Deltamethrin Exposure on Sperm Number in the Cauda Epididymis, Daily Sperm Production, Sperm Transit Rate, Testosterone Level, Diameter of Seminiferous Tubules, Percentage of Seminiferous Tubules with Complete Spermatogenesis, and Sperm Morphology**

| Variables | *N*[b] | Deltamethrin (mg/kg) 0 | 1.0 | 2.0 | 4 |
|---|---|---|---|---|---|
| Sperm number ($\times 10^6$)[a] | 16 | 267±61.3 | 274±48.0 | 255±64.3 | 242±48.4[c] |
| Daily sperm production ($\times 10^6$)[a] | 16 | 42.8±8.74 | 39.9±6.22 | 40.0±7.03 | 37.7±7.08[c] |
| Sperm transit rate (days)[a] | 16 | 6.45±1.73 | 6.97±1.37 | 6.49±1.63 | 6.57±1.60[c] |
| Testosterone level (ng/mL)[a] | 16 | 0.64±0.61 | 1.07±1.14 | 0.43±0.21 | 0.58±0.41[c] |
| Tubule diameter ($\mu$m)[a] | 6 | 265±9.31 | 261±9.08 | 263±5.69 | 250±6.65[d]∗ |
| Tubules with spermatogenesis (%) | 6 | 94.8 | 93.5 | 93.2 | 92.4 |
| Abnormal sperm (%) | 10 | 1.4 | 1.4 | 1.2 | 0.9 |

[a] Mean±standard deviation.
[b] *N*, Number of animals ([c]15 animals; [d] five animals).
∗ Significantly different from control group (∗ $p$<0.05; ANOVA—Tukey test).

**Table A8. Effects of *In Utero* and Lactational Deltamethrin Exposure on Sexual Behavior of Male Offspring Rats**

| Variables | Deltamethrin (mg/kg) 0 | 1.0 | 2.0 | 4.0 |
|---|---|---|---|---|
| Number of animal with ejaculation/number of animals investigated | 9/10 (90%) | 7/10 (70%) | 5/10 (50%) | 7/10 (70%) |
| Mount latency (s)[a] | 24.1±12.3 | 25.1±16.4 | 23.9±17.9 | 17.9±11.9 |
| Intromission latency (s)[a] | 33.1±19.0 | 44.4±30.5 | 42.2±36.2 | 22.7±13.4 |
| Intromission frequency[a] | 1.18±0.38 | 0.99±0.23 | 0.75±0.36 | 0.95±0.70 |
| Ejaculatory latency (s)[b] | 16.1±6.1 | 14.7±6.9 | 15.1±5.1 | 18.6±5.6 |
| Number of intromissions up to ejaculation*b* | 24.3±6.1 | 19.3±5.2 | 19.8±12.7 | 28.0±18.5 |

[a] Mean±standard deviation.
[b] Variables investigated in animals with ejaculation.

Deltamethrin exposure throughout pregnancy and lactation did not affect the mean time it took male offspring rats to display selected sexual development landmarks (testis descent and preputial separation) when compared to control animals. The number of sperm from the cauda epididymis and the daily sperm production were unaffected in the deltamethrin-exposed groups. However, daily sperm production was reduced by 12% ($p$=0.08; ANOVA–Duncan) in animals exposed to 4.0 mg deltamethrin/kg when compared to control animals. The sperm transit rate also did not differ among groups. The groups did not differ significantly in any of the sexual behavior endpoints investigated: mount, intromission, and ejaculatory latencies; number of intromissions up to ejaculation; and ejaculatory frequency within 30 min. However, a trend toward reduction in the number of animals with ejaculations was observed. Hence, the authors reported that *in utero* and lactational exposure to deltamethrin may induce subtle changes in reproductive behavior and physiology of male offspring rats and a statistically significant decrease in absolute testis and epididymis weights.

### *Aziz et al., 2001. Neurodevelopmental consequences of gestational exposure (GD14-GD20) to low dose deltamethrin in rats*

Female Wistar rats of proven fertility were mated (3:1) with adult males. A positive vaginal smear confirmed day 1 of pregnancy and the pregnant rats were randomly divided into two groups and were housed in individual acrylic cages. On GD 14, Group I was administered deltamethrin in corn oil at a dose of 1.0 mg/kg body weight per day by oral gavage from GD 14 to GD 20 (n= 10) (Aziz et al., 2001). Deltamethrin formulation was Decis 2.8% emulsified concentrate and denotes 2.8% of technical grade deltatmethrin (w/w). The treatment dose was prepared by mixing 0.5 g Decis in 13.5 ml corn oil, equivalent to 1 mg deltamethrin/ml in corn oil. Group II (n = 10) received the equal volume of corn oil in an identical manner to serve as controls. At parturition, litters were culled to 8 pups/litter with, where possible, four males and four females. From PD1 to PD21, pups in both groups were examined daily for the functional teratology test

battery described by Vorhees et al, (1979) which is a developmental test battery for neurobehavioral toxicity in rats.

Six pups each of either sex were randomly selected from control and deltamethrin treated groups and sacrificed at 6 and 12 weeks of age. Brains were removed and hippocampi were dissected over ice and homogenized and subjected to microsomal fractionation. Acetyl cholinesterase (AChE) was assayed in the microsomal fraction of hippocampus by spectrophotometry and protein estimations were done. A second set of rats (n =6) from each group was sacrificed at 6 and 12 weeks of age to evaluate cholinergic (muscarinic) receptor binding in the hippocampus of rats. The maze learning behavior was evaluated in a Y-maze (Techno, India) employing shock-motivated visual discrimination response; ten rats per group were allowed to habituate for 2-3 min, followed by a session of 40 trials. Each trial consisted of delivering foot shock to induce the animal to escape to the illuminated arm. The direction of change of illuminated arm was reversed (from clockwise to anticlockwise), during the testing on each day. The number of positive responses (when the animal entered the shock-free illuminated arm) and incorrect runs (when the animal entered another shocked arm) was recorded on each day of testing and the relearning index was assessed by calculating the percent change in incorrect runs (when the animal entered the shocked arm). The change in two positive responses (correct runs made when the direction of change of illuminated arm was reversed) from the first day of trial was calculated to assess the memory functions. The effect of low level *in utero* exposure to deltamethrin (1 mg/kg) during GD14-20 was studied on selected neurobehavioral, neurochemical and immunohistochemical parameters in rats at 6 and 12 weeks of age. Although evaluation was at 6 and 12 weeks postnatally, exposure occurred during the prenatal period.

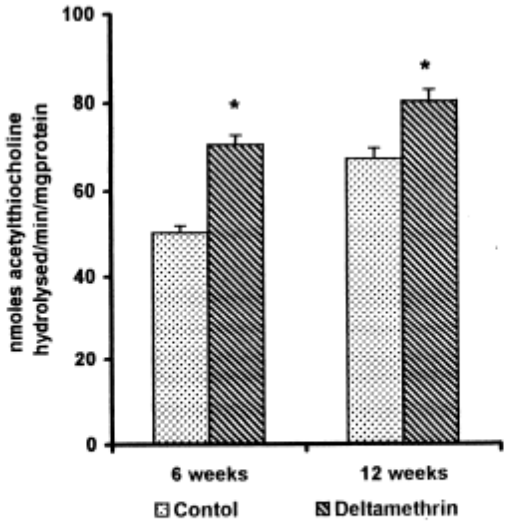


Values represent mean ± SEM of six rats.
* P<0:05; Students t-test.

Figure A1. Effect of gestational exposure (GD14±GD20) of deltamethrin on hippocampal AChE activity in rats.

The significant increase in acetylcholinesterase activity and decrease in (3)H-quinuclidinyl benzilate binding in the hippocampal region of deltamethrin-exposed animals, suggested impairment in cholinergic (muscarinic) receptors, as seen in Table A9 below.

**Table A9. Effect of gestational exposure (GD14-20) on $^3$H-QNB binding (pmol bound/g protein) in hippocampus of rats[a]**

| Treatment: | 6 weeks $^3$H-QNM binding | 12 weeks $^3$H-QNM binding |
|---|---|---|
| Control | 554 ± 30 ($K_D$2.15) (ßmax 1830) | 660 ± 32 ($K_D$2.45) (ßmax 1620) |
| Deltamethrin | 290 ± 33 ($K_D$2.38) (ßmax 1240)* | 400 ± 22 ($K_D$2.60) (ßmax 1380)* |

[a]Values represent mean ± S.E.M. of six rats.
*p < 0:05; Students t-test.
$K_D$ is represented in nmol and ßmax in pmol bound/g protein

**Table A10. Effect of gestational exposure (GD14-20) on relearning index in rats**

| Treatment: | 6 week relearning index | 12 weeks relearning index |
|---|---|---|
| Control | 39 ± 2 | 33 ± 4 |
| Deltamethrin | 28 ± 3* | 22.5 ± 2* |

Values represent mean ± S.E.M. of six rats.
*p < 0:05; Students t-test.

Shock-motivated visual discrimination response, a measure of learning, was evaluated in the Y-maze as noted in the table above. Significant decreases in the learning and memory performances were also observed both at 6 and 12 weeks. This is directly correlated with decrease in muscarinic receptor binding. Immunohistochemistry and image analysis of growth-associated protein-43, a neuron-specific protein present in axonal growth cone and a marker for neuronal differentiation and synaptogenesis, which exhibited aberrant increase in expression in the hippocampus in deltamethrin-exposed rats at both time periods. The data suggest that low level exposure to deltamethrin *in utero* during the brain growth spurt period adversely affects the developing brain and the changes persist even up to 12 weeks postnatal in rats. According to the authors, there is no significant recovery at the 12 weeks assessment timepoint, and significant impairment persists on biochemical and behavioral parameters.

***Ben Abdallah et al., 2009. Comparative effects of dimethoate and deltamethrin on reproductive system in male mice***

The effects of dimethoate (5, 15 or 28 mg/kg-day), deltamethrin (5 mg/kg-day) and their mixture (5 mg/kg-day) on male reproduction in mice after oral administration were studied (Ben Abdallah et al., 2009). Adult, healthy and virgin Swiss Albino male mice were acclimated to the laboratory environment for 1 week prior to use. At a temperature of 23 ± 2°C, relative humidity at approximately 50% and a 12 h light: 12 h dark photoperiod, mice were given standard diet and water ad libitum throughout the study period. Groups of ten male mice, were given dimethoate by gavage at the dose levels of 0 (corn oil), 5, 15, or 28 mg/kg-day. Additionally, groups of ten male mice, were given deltamethrin by gavage at dose levels of 0 (corn oil) or 5 mg/kg-day and another group was given mixture of dimethoate and deltametrin at 5 mg/kg-day. After treatment, all male mice were weighed and killed with diethyl ether. Testes and epididymides were weighed and spermatozoa were obtained by making small cuts in caudae epididymides and placed in 0.05 m of phosphate buffered saline medium (pH 7.4). Sperm suspension was evaluated for percent motility and sperm content. Percent motility was determined by progressive and non-

progressive movements of spermatozoa and sperm count was determined. The authors reported a significantly decreased sperm count, motility and viability and significantly increased percent morphologically abnormal spermatozoa compared with the controls at 5 mg/kg-day for deltamethrin, and the mixture of deltamethrin and dimethoate.

**Table A11. Epididymal sperm parameters in male mice treated with dimethoate and deltamethrin**

| | Deltamethrin | | Deltamethrin + Dimethoate |
|---|---|---|---|
| Treatment (N=10): | 0 | 5 (mg/kg-day) | 5 |
| Sperm Count Per epididymis ($10^6$) | 5.87 ± 1.15 | 2.43 ± 0.54** | 2.21 ± 0.32** |
| Sperm parameters: | | | |
| Motility (%) | 71.5 ± 8.51 | 57.8 ± 7.54** | 54 ± 0.54** |
| Viability (%) | 88.5 ± 6.96 | 57.2 ± 7.65** | 65 ± 0.23** |
| Abnormal Sperm (%) | 7 ± 3.37 | 17 ± 5.20** | 14.2 ± 0.24** |

Data are presented as mean ± SD.
*Significantly different from the control at p ≤0.05.
**Significantly different from the control at p ≤ 0.01.

This study indicated that administration of deltamethrin 5 mg/kg for 21 days to the animals resulted in a significant decrease in epididymal sperm counts, motility and viability and a significant increase in percent of abnormal forms of spermatozoa compared with the control animals. No effect on body and absolute testis or epididymides weights was observed in deltamethrin treated groups. The authors suggest that deltamethrin may exert its biological effects through electrophilic attack on the cellular constituents of organ tissues. Additionally, treatment with 5 mg/kg-day of a mixture of dimethoate and deltamethrin significantly decreased the terminal body weight with decreased epididymal sperm count, motility and viability and increased the abnormal morphology of spermatozoa. According to the authors, these results are the first to show the harmful effect of exposure to this combination of pesticides on sperm parameters in male mice. The authors postulate that it could be possible that loss of terminal body weight for animals treated with the mixture of dimethoate and deltamethrin is due to an interaction between the two toxicants and the pesticide mixture can result in interactive effects rendering the mixture more toxic than the additive effects of each compound (not very clear if the effects are synergistic). They conclude that the present studies reflect that the combination of two potent insecticides (dimethoate and deltamethrin) reduces body weight and epididymal sperm parameters and induces the abnormal morphology of spermatozoa in male mice.

***Ben Abdallah et al., 2010. An in vitro study on reproductive toxicology of Deltamethrin on rat spermatozoa***

In an *in vitro* study the reproductive toxicology of deltamethrin on rat spermatozoa was examined. The potency of deltamethrin to induce oxidative stress response in rat spermatozoa was examined *in vitro*. Spermatozoa were incubated with different concentrations (0, 10, 50, 100 or 200 µm) of deltamethrin for 3 hours at 37°C. Subsequent to exposure, sperm parameters (motility, viability and abnormal morphology), malondialdehyde (MDA), superoxide dismutase (SOD) and catalase (CAT) levels were determined (Ben Abdallah et al., 2010).

**Table A12. Changes in total abnormal morphology, head and tail abnormalities of rat spermatozoa incubated for 3 h at 37°C to different concentrations of deltamethrin**

| | Deltamethrin concentration (µm) | | | | |
|---|---|---|---|---|---|
| Parameters | 0 (Control) | 10 | 50 | 100 | 200 |
| Total abnormal morphology (%) | 5.71 ± 0.44 | 5.8 ± 0.4 | 5.88 ± 0.48 | 7.4 ± 0.36* | 8.11 ± 0.22* |
| Head abnormalities (%) | 4.22 ± 0.23 | 4.43 ± 0.14 | 4.54 ± 0.51 | 6.32 ± 0.32* | 7.02± 0.14* |
| Tail abnormalities (%) | 1.49 ± 0.12 | 1.37 ± 0.11 | 1.34 ± 0.32 | 1.08 ± 0.12* | 1.09 ± 0.11* |

The values are expressed as mean ± SD; n = 8.
*$p < 0.05$, compared with control situation (without Deltamethrin).

A significant decline of sperm motility and viability (graphically presented in the article) and an increase of abnormal sperm morphology, MDA, SOD and CAT levels at different concentrations of deltamethrin were observed.

Photomicrographs of sperm abnormalities were also presented. The authors concluded that deltamethrin exposure *in vitro* may induce toxicity by enhancing the production of reactive oxygen species and disrupting the balance between pro-oxidants and antioxidants as a result of lipid peroxidation (LP) of cell membranes.

***Ben Slima et al., 2012. Embryonic exposure to dimethoate and/or deltamethrin impairs sexual development and programs reproductive success in adult male offspring mice***

This study investigated the reproductive effects of low doses of pesticides, including dimethoate, deltamethrin, and a mixture containing some of both, on male offspring of exposed pregnant mice. Three groups of pregnant Swiss albino mice, 80-120 days of age, five animals per group, were treated daily from GD3 to 21 by oral gavage with dimethoate (5 mg/kg, deltamethrin (5 mg/kg), or 5 mg/kg of the mixture containing both pesticides. Concentrations of the two pesticides in the mixture were not reported. Data from the control group were included in the tables of the publication, but there was no detail on how the control group was treated. After birth, the litters were culled to eight pups per litter, with four male

and four female pups if possible. There was no information on weaning. Four male offspring from each group were sacrificed on PND 60-65. The authors did not report the fate of other pups or the method used to select the four pups assessed in adulthood.

Gestational treatment with 5 mg/kg-day deltamethrin did not affect the body weights in mice, but produced significant reduction in testis weights, epididymal sperm count, motility, and viability in the four mice in adulthood. The proportion of epididymal sperm with abnormal morphology was significantly increased. Degeneration and loss of germ cells, sloughing of seminiferous epithelium into the lumen of seminiferous tubules, and vacuolization in Sertoli cells were observed in deltamethrin-treated mice. Treatment with the mixture that contained unknown amounts of deltamethrin and dimethoate, respectively, did not affect testis weight, but caused adverse changes in sperm parameters similar to those observed in mice treated with deltamethrin alone. The epididymal weight was not affected by any treatment.

**Table A13. Effects of in utero pesticides (dimethoate, deltamethrin and their mixture) exposure on absolute and relative organ weights of adult male offspring mice**
**(n = 4)**

| | Control | Deltamethrin | Dimethoate | Mixture |
|---|---|---|---|---|
| **mg/kg-day** | **0** | **5** | **5** | **5** |
| Terminal body weights[a] | 28.82 ± 3.6 | 28.52 ± 2.70 | 27.21 ± 0.71 | 29.18 ± 4.33 |
| Absolute organ weights[a] | | | | |
| Left testis | 0.10 ± 0.01 | 0.04 ± 0.01** | 00.09 ± 0.01 | 0.11 ± 0.02 |
| Right testis | 0.11 ± 0.01 | 0.04 ± 0.01** | 0.09 ± 0.01 | 0.12 ± 0.02 |
| Testes | 0.21 ± 0.02 | 0.09 ± 0.02* | 0.18 ± 0.03 | 0.24 ± 0.04 |
| Left epididymis | 0.021 ± 0.003 | 0.02 ± 0.01 | 0.019 ± 0.002 | 0.02 ± 0.00 |
| Right epididymis | 0.023 ± 0.004 | 0.02 ± 0.01 | 0.018 ± 0.001 | 0.02 ± 0.00 |
| Epididymis | 0.044 ± 0.007 | 0.03 ± 0.01 | 0.037 ± 0.001 | 0.05 ± 0.01 |
| Relative organ weights[b] | | | | |
| Testes | 0.007 ± 0.005 | 0.003 ± 0.007* | 0.008 ± 0.002 | 0.008 ± 0.01 |
| Epididymis | 0.001 ± 0.001 | 0.001 ± 0.003 | 0.001 ± 0.001 | 0.001 ± 0.001 |

Data are presented as mean ± SD
[a]Body and organ weights (g).
[b]Organ weight/body weight.
*Significantly different from control at P ≤ 0.05.
**Significantly different from control at P ≤ 0.01

**Table A14. Sperm parameters in male offspring of mice exposed to dimethoate, deltamethrin and their mixture during pregnancy**

| | Control | Deltamethrin | Dimethoate | Mixture |
|---|---|---|---|---|
| **mg/kg-day** | **0** | **5** | **5** | **5** |
| Spermatozoa count | | | | |
| Per epididymis ($x10^6$) | 4.3 ± 0.52 | 1.65 ± 1.20** | 3.30 ± 0.42 | 2.10 ± 0.66* |
| Sperm parameters | | | | |
| Motility (%) | 71 ± 11.4 | 32.50 ± 3.54** | 55 | 52.00 ± 4.47* |
| Viability (%) | 93.8 ± 5.07 | 55.00 ± 7.07** | 85 ± 7.07 | 51.00 ± 8.12** |
| Abnormal Forms (%) | 3.8 ± 2.49 | 25.90 ± 1.27** | 9.5 ± 7.78** | 10.10 ± 6.17** |

Data are presented as mean ± SD.
*Significantly different from control at P ≤ 0.05.
**Significantly different from control at P ≤ 0.01.

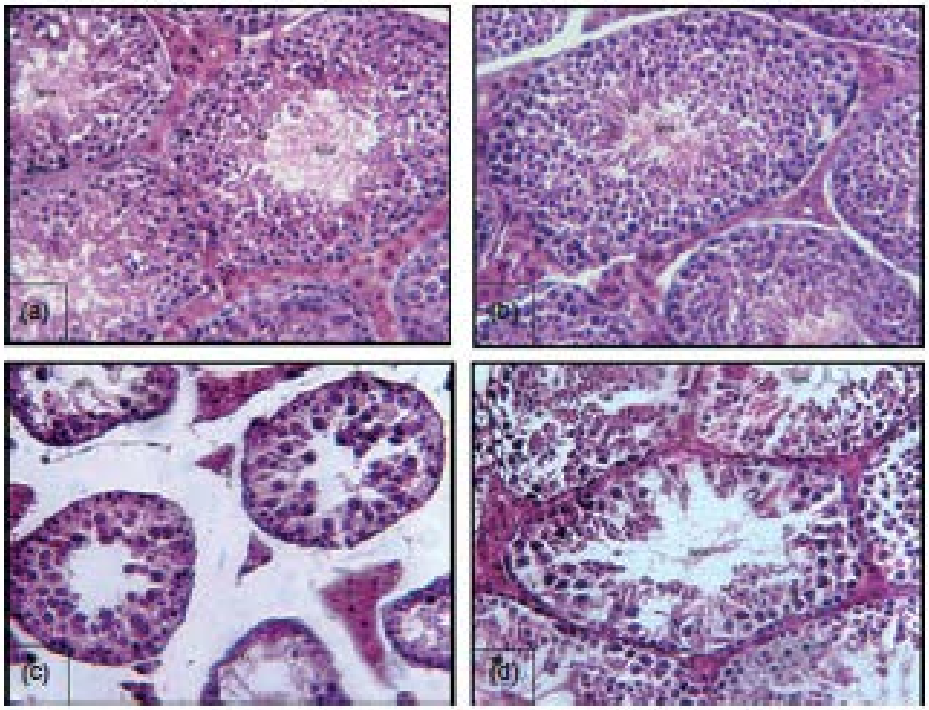


Figure A2 (a) Testicular sections of control mice which show normal spermatogenesis with the normal cell arrangement in the seminiferous tubules. (b) Testicular sections of mice treated with 5 mg/kg-day dimethoate with normal cell arrangement in the seminiferous tubules (x200 H&E). (c) Testicular sections of mice treated with 5 mg/kg-day deltamethrin with degenerations in seminiferous tubules and sloughing of germ cells into tubular lumen. (x200 H&E).
(d) Testicular sections of mice treated with 5 mg/kg-day of the mixture (dimethoate + deltamethrin), which show apparently inter-cellular disassociations of germ cells and loss of germ cells (x200 H&E).

***Crofton et al., 2007. Comments on: Effect of prenatal exposure of deltamethrin on the ontogeny of xenobiotic metabolizing cytochrome P450s in the brain and liver of offsprings***

The comments deal with the issue that pregnant dams were not solely exposed to deltamethrin and state that the major problem was the inability to determine the chemical agent, or agents, responsible for the alterations in CYP expression in offspring. Since the authors exposed the pregnant rats to Decis 2.8% EC®, an emulsion that contains 2.8% technical grade deltamethrin and 97.2% unknown "inerts", the conclusions cannot be attributed solely to deltamethrin exposure. The comments also include the failure to use a control group that contained the "inerts" without Decis 2.8% EC and the use of corn oil as the vehicle control, making the case that some of the "inerts" may be responsible for the upregulation of P450s reported by the authors. Nevertheless, the commenters stated that these problems in data interpretation should not detract from the fact that the study provided valuable information on the normal ontogeny of P450 mRNAs.

***El-Gohary et al., 1999. Deltamethrin-induced testicular apoptosis in rats: the protective effect of nitric oxide synthase inhibitor***

In this study, El-Gohary et al. (El-Gohary et al., 1999) examined and characterized testicular apoptosis induced by exposure of male rats to deltamethrin and assessed the role played by nitric oxide (NO), as well as other reactive oxygen species (ROS) in controlling testicular apoptosis. Adult male albino rats (strain not specified) were divided into 5 groups and treated for 21 consecutive days as follows:

Group 1: Untreated control.
Group 2: Vehicle control, hence injected intraperitoneally (i.p) with corn oil alone in an equivalent volume to that received by the treated group
Group 3: Rats injected daily with deltamethrin (1mg/kg) (i.p)
Group 4: Rats treated daily with N(G)-nitro monomethyl L-arginine hydrochloride (L-NMMA) (1mg/kg) 2 hours prior to treatment with deltamethrin (1mg/kg) (i.p)
Group 5: rats treated daily with L-NMMA 1 mg/kg alone.

Subsequent to treatment the rats were decapitated and blood withdrawn by heart puncture, and one testis was collected for evaluation.

Testicular apoptotic DNA fragmentation pattern and the associated histopathological changes of testicular tissue sections showed apoptosis confined to the basal germ cells, primary and secondary spermatocytes. According to the authors, these changes, in addition to the appearance of Sertoli cell vacuoles in deltamethrin-intoxicated animals, indicate the suppression of spermatogenesis. Plasma levels of both nitric oxide and lipid peroxides measured as malondialdehyde (MDA) were also found to be significantly

increased in deltamethrin-treated animals. Administration of nitric oxide synthase (NOS) inhibitors such as L-NMMA, 1 mg/kg to rats 2 hours before exposure to deltamethrin was effective in the reduction of the typically testicular apoptotic DNA fragmentation pattern and the associated histopathological changes.

In the report the following photomicrographs were included:

(A) Section shows normal testicular tissue structure (hematoxylin and eosin (H&E), x 250)
(B) Section from deltamethrin-intoxicated rats (1 mg/kg daily for 21 days) shows arrested spermatogenesis, thickened basement membrane (1) and dyscohesive basal germ cells. Sertoli cell vacuoles (2) with desquamated cells in the lumen of seminiferous tubules (3) were found. Vacuolization in the interstitial tissue cells (4) was also noticed. Basal germ cells and primary and secondary spermatocytes show typical features of apoptosis (5) as cells have dark, condensed and fragmented chromatin with hypereosinophilic cytoplasm. Spermatozoa are not present in the lumenal aspect of the seminiferous tubules (H&E, x400)
(C) Section from testis after pretreatment of animals with L-NMMA (1 mg/kg daily for 21 days) 2 h prior to administration of deltamethrin. Authors reported that most tubules did not contain apoptotic bodies with frequent mitotic figures in germ cells (arrows) (H&E, x400).

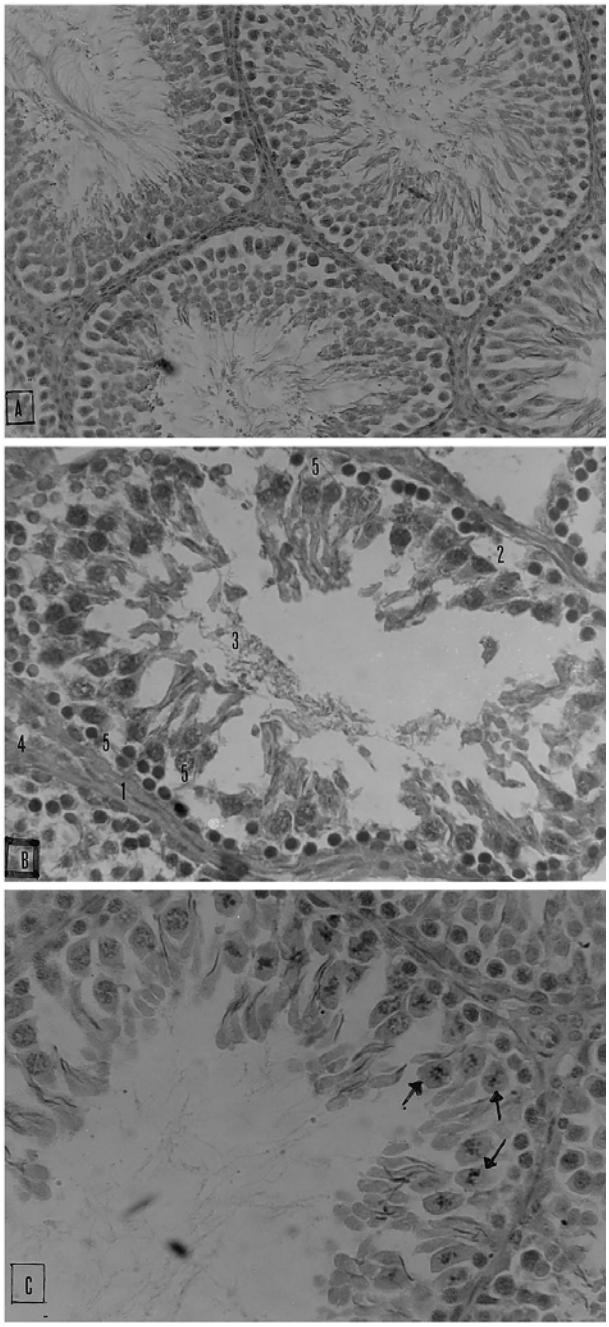


According to the authors, these findings indicate that deltamethrin induces testicular apoptosis and the apoptosis may be mediated by nitric oxide.

***Gilmore et al., 2006 A developmental neurotoxicity screening study with technical grade deltamethrin in Wistar rats.***

Groups of 30 mated female Wistar rats were exposed to 0, 20, 80 or 200 ppm technical grade deltamethrin in the diet from GD 6 through lactation day (LD) 21 in a standard developmental neurotoxicity study (Gilmore et al., 2006). The mean daily test substance intake based on the average daily food consumption for the last two weeks of gestation and three weeks of lactation was 1.64, 6.78 and 16.1 mg/kg-day for the 20, 80 and 200 ppm groups, respectively. Maternal animals were evaluated for cage-side and detailed clinical observations, body weight and food consumption throughout the treatment period. Representatives of surviving offspring were evaluated for detailed clinical observation, functional observational battery, body weight, preputial separation and vaginal patency, automatic measure of activity (figure-eight maze), auditory startle habituation, learning and memory (passive avoidance after weaning and water maze task) and ophthalmic examination. Neural tissues were collected from 10/sex/dietary level on PND 21 and PND 75 for microscopic examination and morphometry.

**Table A15. Mean food consumption during gestation, g/day**

| Dose ppm | Control | 20 ppm | 80 ppm | 200 ppm |
|---|---|---|---|---|
| Day 6-13 | 20.7 | 19.9 | 19.6 | 17.2** |
| Day 13-20 | 22.0 | 21.9 | 23.0 | 21.6 |

** p<0.01.

**Table A16. Mean gestation body weights, g**

| Dose ppm | Control | 20 ppm | 80 ppm | 200 ppm |
|---|---|---|---|---|
| Day 0 | 213.5 | 210.9 | 208.1 | 209.2 |
| Day 6 | 237.3 | 234.3 | 231.3 | 232.5 |
| Day 13 | 263.7 | 260.1 | 255.3 | 247.1** |
| Day 20 | 326.1 | 320.2 | 316.8 | 302.7** |
| Weight gain | 112.6 | 109.3 | 108.7 | 93.5** |

** p<0.01.

**Table A17. Mean lactation body weights, g**,

| Dose ppm | Control | 20 ppm | 80 ppm | 200 ppm |
|---|---|---|---|---|
| Day 0 | 252.3 | 248.9 | 244.1 | 233.5** |
| Day 4 | 270.3 | 264.0 | 258.3 | 248.5** |
| Day 7 | 276.3 | 275.2 | 269.0 | 258.8** |
| Day 14 | 288.6 | 288.5 | 286.8 | 280.1 |
| Day 21 | 284.8 | 285.9 | 285.1 | 278.6 |

** p<0.01.

**Table A18. Summary of litter data**

| Dose ppm | | Control | 20 ppm | 80 ppm | 200 ppm |
|---|---|---|---|---|---|
| No. of litters | | 23 | 23 | 23 | 23 |
| Total no. of live pups born | | 265 | 249 | 259 | 258 |
| Total no. of pups missing/found dead | | 1/0 | 6/1 | 2/1 | 0/1 |
| Mean litter size | | 11.5 | 10.8 | 11.3 | 11.2 |
| Mean weight viable pups (g) | Birth | 5.9 | 6.0 | 5.8 | 5.7 |
| | Day 4 (pre-cull) | 9.8 | 10.2 | 9.4 | 8.9* |
| | Day 4 (post-cull) | 9.8 | 10.2 | 9.4 | 8.9 |
| | Day 11 | 24.5 | 25.0 | 23.8 | 22.2** |
| | Day 17 | 37.4 | 37.8 | 36.4 | 35.0* |
| | Day 21 | 48.5 | 48.2 | 46.8 | 45.1* |
| | Gain | 42.7 | 42.3 | 41.1 | 39.4* |
| Mean no. of viable pups | Birth | 12 | 11 | 11 | 11 |
| | Day 4 (pre-cull) | 12 | 10 | 11 | 11 |
| | Day 4 (post-cull) | 8 | 8 | 8 | 8 |
| | Day 21 | 8 | 8 | 8 | 8 |
| Mean live birth index | | 100.0 | 98.9 | 100.0 | 100.0 |
| Mean viability index | | 100.0 | 97.9 | 98.8 | 99.7 |
| Mean lactation index | | 99.5 | 99.5 | 100.0 | 100.0 |

* $p<0.05$. ** $p<0.01$.

**Table A19. Mean pup weight (g)**

| Dose ppm | | Control | 20 ppm | 80 ppm | 200 ppm |
|---|---|---|---|---|---|
| Day 0 | Male | 6.0 | 6.1 | 5.9 | 5.8 |
| | Female | 5.7 | 5.8 | 5.6 | 5.5 |
| | Males and females | 5.9 | 6.0 | 5.8 | 5.7 |
| Day 4 preculling | Male | 9.9 | 10.4 | 9.6 | 9.1 |
| | Female | 9.6 | 10.0 | 9.1 | 8.7* |
| | Males and females | 9.8 | 10.2 | 9.4 | 8.9* |
| Day 4 postculling | Male | 10.0 | 10.4 | 9.6 | 9.1* |
| | Female | 9.6 | 10.0 | 9.2 | 8.8 |
| | Males and females | 9.8 | 10.2 | 9.4 | 8.9 |
| Day 11 | Male | 24.8 | 25.4 | 24.2 | 22.4* |
| | Female | 24.2 | 24.6 | 23.3 | 22.0* |
| | Males and females | 24.5 | 25.0 | 23.8 | 22.2** |
| Day 17 | Male | 38.0 | 38.4 | 37.2 | 35.4* |
| | Female | 36.7 | 37.1 | 35.6 | 34.6* |
| | Males and females | 37.4 | 37.8 | 36.4 | 35.0* |
| Day 21 | Male | 49.2 | 49.1 | 47.9 | 45.5* |
| | Female | 47.9 | 47.4 | 45.7 | 44.6* |
| | Males and females | 48.5 | 48.2 | 46.8 | 45.1* |

* p<0.05. ** p<0.01

**Table A20. Functional observational battery on PND 4 for F1 males**

| Dose ppm | | Control | 20 ppm | 80 ppm | 200 ppm |
|---|---|---|---|---|---|
| Number of animals examined | | 16 | 16 | 16 | 16 |
| Ease of removal | Min. resistance with vocalization | 1(6%) | 1(6%) | 2(13%) | 8*(50%) |

* p<0.05.

**Table A21. Mean brain weight of F1 females at PND 75(± 5), perfused**

| Dose ppm | Control | 20 ppm | 80 ppm | 200 ppm |
|---|---|---|---|---|
| Number of animals examined | 10 | 10 | 10 | 10 |
| Terminal body weight (g) | 193.9 | 195.0 | 192.6 | 189.1 |
| Brain, fixed (g) | 1.793 | 1.785 | 1.753 | 1.673* |
| Brain, fixed/Body weight (%) | 0.928 | 0.919 | 0.913 | 0.887 |

* p<0.05.

The authors reported that the mean age of attainment of preputial separation was delayed 1.6 days in high dose males (45.1 days vs. 43.5 days in control),

apparently associated with the delay in growth equivalent to about one day's body weight. According to the authors the maternal NOEL was 80 ppm (6.78 mg/kg-day) due to decreased body weight and food consumption in the 200 ppm group during gestation and decreased body weight during lactation, and the reproductive NOEL was 200 ppm (16.1 mg/kg-day) due to no effect on reproductive parameters in the doses tested. The offspring NOEL was 80 ppm (6.78 mg/kg-day) due to reduced post-natal body weight, significantly reduced fixed female brain weight in F1 rats (in perfused rats only) at termination and increased resistance at removal with vocalization that was observed in the 200 ppm group males.

No adverse effects were noted for auditory startle habituation, or learning and memory (passive avoidance after weaning and water maze task).
According to an EPA report (Scollon, 2010), the DNT is not a particularly sensitive study for evaluating comparative sensitivity of young animals to adults for pyrethroids although the Sheets et al. (1994) study demonstrated a greater sensitivity of pups compared to adults for lethal doses of deltamethrin. Such sensitivity was not observed in the deltamethrin DNT.

### *Hoberman, 1992. Deltamethrin: Reproductive Effect of Deltamethrin Administered Orally in the Diet to Crl:CDBR VAF/Plus Rats for Two Generations*

In this study 30 rats/sex/group were dosed in the diet with 0, 5, 20, 80 or 320 ppm of deltamethrin technical (purity: 99.7%) for two generations (Hoberman, 1992). The parental generation (P1) was treated with deltamethrin in the diet 82 days prior to mating, during mating, gestation and three weeks of lactation. From the second generation offspring (F1) animals, 30 per sex per exposure-group were selected as parents and treated for a minimum of 86 days in the premating period, during mating, through the gestation period and for another three weeks through the lactation period. The concentration of the active ingredient in the dosing preparations was analyzed up to 11 times during the study and the mean analytical values were 5.03 (range, 4.7 to 5.6), 21.0 (range, 19.2 to 25.4), 81.6 (range, 79.1 to 91.6) and 322.2 (range, 314 to 338) ppm for the nominal values of 5, 20, 80 and 320 ppm, respectively. The resulting dose levels are noted in Table A22.

**Table A22. Mean uptake of active ingredient (mg/kg-day)**

| Mean uptake of active ingredient (mg/kg-day) | | | | |
|---|---|---|---|---|
| Sex and time period | Treatment Level (ppm) | | | |
| | 5 | 20 | 80 | 320 |
| P1, Males, 1-82 days | 0.3 | 1.3 | 5.4 | 21.2 |
| P1, Females, 1-82 days | 0.4 | 1.5 | 6.1 | 23.5 |
| Gestation, 0-20 days | 0.3 | 1.4 | 5.7 | 23.0 |
| Lactation, 1-14 days | 0.6 | 2.5 | 10.6 | 37.3 |
| F1, Males, 1-99 days | 0.4 | 1.4 | 5.8 | 24.9 |
| F1, Females, 1-99 days | 0.4 | 1.7 | 6.7 | 27.2 |
| Gestation, 0-20 days | 0.3 | 1.4 | 5.2 | 21.8 |
| Lactation, 1-14 days | 0.6 | 2.4 | 9.7 | 35.0 |

In the P1 generation, one female in the 320 ppm group died as a result of the treatment. The clinical signs exhibited by the P1 generation high dose females during the lactation period included ataxia and hypersensitivity. In the high dose group for the F1 generation, 17 male and 19 female treatment-related mortalities were reported between days 2 and 44 of the premating period. The clinical signs included ataxia, urine-stained abdominal fur, impaired righting reflex, splayed limbs and vocalization. These signs were most prevalent during the first 5 weeks after weaning when the consumption of the active ingredient was at its highest level. The authors reported that signs became less severe as the animals aged, body weight increased and they consequently consumed a lower relative quantity of the test material.

The mean body weights and food consumption values of the 320 ppm treatment group of both generations were lower than those of the controls ($p<0.01$). The values for mean pup weights are noted in Table A23.

**Table A23. Mean Pup Weight (g)[a]**

| MEAN PUP WEIGHT (g)[a] | | | | | |
|---|---|---|---|---|---|
| | Dose (ppm) | | | | |
| | 0 | 5 | 20 | 80 | 320 |
| F1 Generation | | | | | |
| Day 1 | 6.7 | 7.1 | 6.8 | 6.6 | 6.4 |
| Day 4 precull | 10.4 | 10.4 | 9.8 | 10.2 | 8.9** |
| Day 4 postcull | 10.5 | 10.5 | 9.9 | 10.2 | 9.0** |
| Day 7 | 16.9 | 17.4 | 16.4 | 16.9 | 13.7** |
| Day 14 | 34.1 | 34.2 | 34.0 | 35.1 | 26.8** |
| Day 21 | 52.5 | 53.4 | 52.9 | 53.6 | 39.3** |
| F2 Generation | | | | | |
| Day 1 | 6.5 | 6.5 | 6.4 | 6.6 | 6.3 |
| Day 4 precull | 9.5 | 10.0 | 9.9 | 10.0 | 9.1 |
| Day 4 postcull | 9.7 | 10.1 | 10.0 | 10.2 | 9.1 |
| Day 7 | 16.2 | 17.5 | 17.0 | 16.9 | 14.2* |
| Day 14 | 34.1 | 37.8** | 36.2 | 35.3 | 27.2** |
| Day 21 | 53.1 | 58.0 | 56.8 | 56.0 | 40.1** |

[a] Reported value based upon the mean pup weights recorded for each litter
* Value significantly different from that of the control (p<0.05)
** Value significantly different from that of the control (p<0.01)

Although absolute and relative organ weights were significantly reduced or increased, respectively, in comparison to the control values, the authors stated that there was no apparent treatment-related effect upon any of the organs assessed. In the P1 males in the 320 ppm group, the absolute organ weights were not affected by the treatment. The ratio of testes weight to brain weight was also reduced at this dose level in these animals. The relative mean testis (p<0.01), seminal vesicles with fluid (p<0.05), pituitary (p<0.05), and brain (p<0.01) weights were increased over those of the control values. For the P1 females in the same group, the absolute mean non-gravid uterine (p<0.01) and pituitary (p<0.05) weights were less than those of the control. The absolute mean weights of the epididymides (p<0.01) and testes (p<0.01) of the F1 males in the high dose group were less than those of the control. In contrast, the relative mean weights for the testes (p<0.05), seminal vesicles with fluid (p<0.01) and brain (p<0.01) were greater than those of the control. While the relative weights of the testes were increased in both P1 and F1 animals at the highest dose tested (P1: 21.2 mg/kg-day; F1: 24.9 mg/kg-day) in this study, the terminal body weights were reduced for these animals. For the F1 females of the same group, the absolute mean weight for the non-gravid uterus (p<0.01) was less than that of the control while the relative mean weight of the brain (p<0.01) was greater than that of the control. In P1 animals, gross lesions of testes were identified in 1 animal at each of the following groups (5, 80 and 320 ppm). In the F1 high dose group, excessive mortality allowed only values of 11 animals to be averaged. Tables 24-29 include data on organ weights, relative weights and ratio of organ weights to brain weights at necropsy for P1 and F1 animals.

**Table A24. Terminal Body Weights and Organ Weights at Necropsy- Summary P1 Generation Male Rats (Mean ± standard deviation)**

| Dose (ppm) | 0 | 5 | 20 | 80 | 320 |
|---|---|---|---|---|---|
| Number | 30 | 27[a,b,c] | 30 | 29[c] | 29[c] |
| Terminal body weight | 658.9 ± 79.4 | 655.9 ± 64.7 | 648.6 ±51.5 | 663.5 ± 58.3 | 574.4 ± 63.0** |
| Epididymis | | | | | |
| Left | 0.74 ±0.06 | 0.75 ± 0.08 | 0.76 ± 0.06 | 0.77 ± 0.06 | 0.72 ± 0.09 |
| Right | 0.76 ±0.06 | 0.77 ± 0.08 | 0.78 ± 0.08 | 0.79 ± 0.05 | 0.73 ± 0.10 |
| Testes | | | | | |
| Left | 1.87 ± 0.14 | 1.87 ± 0.18 | 1.85 ± 0.14 | 1.91 ± 0.14 | 1.86 ± 0.17 |
| Right | 1.88 ± 0.13 | 1.87 ± 0.18 | 1.86 ± 0.17 | 1.92 ± 0.14 | 1.87 ± 0.18 |
| Prostate | 1.13 ± 0.25 | 1.10 ± 0.19 | 1.16 ± 0.20 | 1.20 ± 0.24 | 1.12 ± 0.26 |
| Seminal Vesicle[d] | | | | | |
| With fluid | 1.90 ± 0.31 | 1.92 ± 0.26 | 2.08 ± 0.32 | 2.01 ± 0.43 | 1.99 ± 0.32 |
| Without fluid | 1.03 ± 0.23 | 1.05 ± 0.26 | 1.08 ± 0.27 | 1.06 ± 0.26 | 1.05 ± 0.20 |
| Pituitary | 0.015 ± 0.004 | 0.016 ± 0.003 | 0.014 ± 0.004 | 0.015 ± 0.003 | 0.015 ± 0.003 |
| Brain | 2.23 ± 0.12 | 2.22 ± 0.11 | 2.25 ± 0.20 | 2.22 ± 0.23 | 2.22 ± 0.11 |

All weights are recorded in grams (g); ** significantly different from the vehicle control group value ($p \leq 0.01$)
[a]excludes values for rat found dead on day 74 of the study
[b]excludes values for rat found dead on day 112 of the study
[c]excludes male rats that had gross lesions of the testes identified at necropsy
[d]includes the coagulating gland.

**Table A25. Terminal Body Weights and Ratio (%) of Organ Weights to Body Weights at Necropsy- Summary P1 Generation Male Rats (Mean ± standard deviation)**

| Dose (ppm) | 0 | 5 | 20 | 80 | 320 |
|---|---|---|---|---|---|
| Number | 30 | 27[a,b,c] | 30 | 29[c] | 29[c] |
| Terminal body weight | 658.9 ± 79.4 | 655.9 ± 64.7 | 648.6 ±51.5 | 663.5 ± 58.3 | 574.4 ± 63.0** |
| Epididymis (% TBW) | | | | | |
| Left | 0.11 ±0.02 | 0.12 ± 0.01 | 0.12 ± 0.01 | 0.12 ± 0.01 | 0.13 ± 0.02* |
| Right | 0.12 ±0.02 | 0.12 ± 0.01 | 0.12 ± 0.02 | 0.12 ± 0.01 | 0.12 ± 0.02 |
| Testes(% TBW) | | | | | |
| Left | 0.29 ± 0.04 | 0.29 ± 0.03 | 0.29 ± 0.04 | 0.28 ± 0.03 | 0.32 ± 0.03** |
| Right | 0.29 ± 0.04 | 0.29 ± 0.03 | 0.29 ± 0.04 | 0.29 ± 0.03 | 0.33 ± 0.03** |
| Prostate | 0.17 ± 0.04 | 0.17 ± 0.04 | 0.18 ± 0.03 | 0.18 ± 0.04 | 0.20 ± 0.05 |
| Seminal Vesicle[d] (% TBW) | | | | | |
| With fluid | 0.29 ± 0.06 | 0.29 ± 0.04 | 0.32 ± 0.06 | 0.31 ± 0.08 | 0.35 ± 0.06* |
| Without fluid | 0.16 ± 0.04 | 0.16 ± 0.03 | 0.17 ± 0.04 | 0.16 ± 0.04 | 0.18 ± 0.04 |
| Pituitary (% TBW) x1000 | 2.34 ± 0.59 | 2.38 ± 0.46 | 2.20 ± 0.52 | 2.29 ± 0.40 | 2.65 ± 0.59* |
| Brain (% TBW) | 0.34 ± 0.04 | 0.34 ± 0.03 | 0.35 ± 0.05 | 0.34 ± 0.04 | 0.39 ± 0.04** |

All weights are recorded in grams (g)
**significantly different from the vehicle control group value ($p \leq 0.01$)
*significantly different from the vehicle control group value ($p \leq 0.05$)
[a]excludes values for rat found dead on day 74 of the study; [b]excludes values for rat found dead on day 112 of the study
[c]excludes male rats that had gross lesions of the testes identified at necropsy; [d]includes the coagulating gland.
% TBW = (organ body weight/terminal body weight) x 100

**Table A26. Ratio (%) of Organ Weights to Brain Weights at Necropsy- Summary F1 Generation Male Rats (Mean ± standard deviation)**

| Dose (ppm) | 0 | 5 | 20 | 80 | 320 |
|---|---|---|---|---|---|
| Number | 30 | 27[a,b,c] | 30 | 29[c] | 29[c] |
| Brain weight | 2.23 ± 0.12 | 2.22 ± 0.11 | 2.25 ± 0.20 | 2.22 ± 0.23 | 2.22 ± 0.11 |
| Epididymis (% BRW) | | | | | |
| Left | 33.18 ± 3.41 | 34.00 ± 3.69 | 34.05 ± 3.58 | 35.30 ± 7.57 | 32.23 ± 4.07 |
| Right | 34.23 ± 3.69 | 34.95 ± 3.97 | 34.93 ± 4.77 | 36.30 ± 5.05 | 32.98 ± 4.02 |
| Testes ( % BRW) | | | | | |
| Left | 84.32 ± 7.61 | 84.22 ± 8.81 | 82.74 ± 8.20 | 87.48 ± 14.46 | 83.54 ± 7.92 |
| Right | 84.61 ± 7.84 | 84.36 ± 9.02 | 83.27 ± 8.76 | 87.92 ± 13.88 | 84.10 ± 8.05 |
| Prostate | 50.89 ± 11.01 | 49.50 ± 7.87 | 51.99 ± 9.70 | 54.91 ± 14.89 | 50.20 ± 11.09 |
| Seminal Vesicle[d] (% BRW) | | | | | |
| With fluid | 85.53 ± 14.97 | 86.40 ± 11.53 | 92.80 ± 14.23 | 93.36 ± 33.33 | 88.98 ± 15.11 |
| Without fluid | 46.32 ± 10.55 | 47.35 ± 11.18 | 48.49 ± 12.75 | 49.32 ± 19.05 | 47.26 ± 9.75 |
| Pituitary (% BRW) | 0.69 ± 0.18 | 0.70 ± 0.12 | 0.63 ± 0.16 | 0.69 ± 0.16 | 0.68 ± 0.15 |

All weights are recorded in grams (g)
[a]excludes values for rat found dead on day 74 of the study
[b]excludes values for rat found dead on day 112 of the study
[c]excludes male rats that had gross lesions of the testes identified at necropsy
[d]includes the coagulating gland.
% BRW = (organ weight/brain weight) x 100

**Table A27. Terminal Body Weights and Organ Weights at Necropsy- Summary F1 Generation Male Rats (Mean ± standard deviation)**

| Dose (ppm) | 0 | 5 | 20 | 80 | 320 |
|---|---|---|---|---|---|
| Number | 30 | 30 | 30 | 30 | 28[a] |
| Terminal body weight | 693.5 ± 75.6 | 738.8 ± 76.1* | 700.6 ± 76.3 | 726.6 ± 65.0 | 553.4 ± 64.8** |
| Epididymis | | | | | |
| Left | 0.80 ± 0.12 | 0.79 ± 0.11 | 0.79 ± 0.07 | 0.80 ± 0.11 | 0.67 ± 0.08** |
| Right | 0.81 ± 0.10 | 0.82 ± 0.08 | 0.79 ± 0.08 | 0.81 ± 0.09 | 0.68 ± 0.07** |
| Testes | | | | | |
| Left | 2.02 ± 0.18 | 1.97 ± 0.22 | 1.93 ± 0.2 | 2.01 ± 0.17 | 1.77 ± 0.10** |
| Right | 2.03 ± 0.18 | 2.00 ± 0.19 | 1.92 ± 0.19 | 2.04 ± 0.17 | 1.78 ± 0.12** |
| Prostate | 1.21 ± 0.27 | 1.24 ± 0.24 | 1.17 ± 0.31 | 1.18 ± 0.27 | 1.01 ± 0.18 |
| Seminal Vesicle | | | | | |
| With fluid | 1.95 ± 0.31 | 2.08 ± 0.34 | 1.92 ± 0.35 | 1.97 ± 0.29 | 1.88 ± 0.34 |
| Without fluid | 1.07 ± 0.23 | 1.09 ± 0.21 | 1.06 ± 0.26 | 1.09 ± 0.15 | 0.97 ± 0.19 |
| Pituitary | 0.016 ± 0.003 | 0.017 ± 0.005 | 0.017 ± 0.003 | 0.016 ± 0.005 | 0.014 ± 0.004 |
| Brain | 2.23 ± 0.09 | 2.24 ± 0.11 | 2.27 ± 0.16 | 2.25 ± 1.14 | 2.14 ± 0.11 |

All weights are recorded in grams (g); *significantly different from the vehicle control group value ($p \leq 0.05$)
** significantly different from the vehicle control group value ($p \leq 0.01$)
[a]excludes values for rat found dead on day 74 of the study
[b]excludes values for rat found dead on day 112 of the study
[c]excludes male rats that had gross lesions of the testes identified at necropsy
[d]includes the coagulating gland.

**Table A28. Terminal Body Weights and Ratio (%) of Organ Weights to Body Weights at Necropsy- Summary F1 Generation Male Rats (Mean ± standard deviation)**

| Dose (ppm) | 0 | 5 | 20 | 80 | 320 |
|---|---|---|---|---|---|
| Number | 30 | 30 | 30 | 30 | [11][a] |
| Terminal body weight | 693.5 ± 75.6 | 738.8 ± 76.1* | 700.6 ± 76.3 | 726.6 ± 65.0 | 553.4 ± 64.8** |
| Epididymis (%TBW) | | | | | |
| Left | 0.12 ± 0.02 | 0.11 ± 0.02 | 0.11 ± 0.01 | 0.11 ± 0.02 | 0.12 ± 0.02 |
| Right | 0.12 ± 0.02 | 0.11 ± 0.01 | 0.11 ± 0.02 | 0.11 ± 0.02 | 0.12 ± 0.02 |
| Testes (%TBW) | | | | | |
| Left | 0.29 ± 0.03 | 0.27 ± 0.04* | 0.28 ± 0.04 | 0.28 ± 0.03 | 0.32 ± 0.04* |
| Right | 0.30 ± 0.03 | 0.27 ± 0.03* | 0.28 ± 0.04 | 0.28 ± 0.03 | 0.32 ± 0.04* |
| Prostate | 0.17 ± 0.03 | 0.17 ± 0.04 | 0.17 ± 0.05 | 0.16 ± 0.04 | 0.18 ± 0.04 |
| Seminal Vesicle (%TBW) | | | | | |
| With fluid | 0.28 ± 0.06 | 0.28 ± 0.05 [29][b] | 0.28 ± 0.05 [29][b] | 0.27 ± 0.04 [29][b] | 0.34 ± 0.07** |
| Without fluid | 0.16 ± 0.04 | 0.15 ± 0.03 [29][b] | 0.15 ± 0.04 | 0.15 ± 0.02 [29][b] | 0.18 ± 0.04 |
| Pituitary (%TBW) x1000 | 2.36 ± 0.53 | 2.25 ± 0.51 [26][b] | 2.46 ± 0.54 [28][b] | 2.29 ± 0.72 | 2.51 ± 0.89 |
| Brain | 0.32 ± 0.04 | 0.31 ± 0.04 | 0.33 ± 0.04 [29][b] | 0.31 ± 0.03 | 0.39 ± 0.06** |

All weights are recorded in grams (g); (%TBW) = (organ body weight/terminal body weight) x 100
**significantly different from the vehicle control group value ($p \leq 0.01$); [ ] = number of values averaged;
*significantly different from the vehicle control group value ($p \leq 0.05$)
[a]excludes values for rats that were found dead
[b]excludes values for rats that had organs damaged during processing or fluid loss before weighing

**Table A29. Ratio (%) of Organ Weights to Brain Weights at Necropsy- Summary F1 Generation Male Rats (Mean ± standard deviation)**

| Dose (ppm) | 0 | 5 | 20 | 80 | 320 |
|---|---|---|---|---|---|
| Number | 30 | [29][b] | 30 | 30 | [11][a] |
| Brain weight | 2.23 ± 0.09 | 2.24 ± 0.11 | 2.27 ± 0.16 | 2.25 ± 0.14 | 2.14 ± 0.11 |
| Epididymis (% BRW) | | | | | |
| Left | 36.07± 5.56 | 36.12 ± 4.94 | 34.84 ± 3.41 | 35.69 ± 4.94 | 31.45 ± 4.06 |
| Right | 36.57 ± 4.51 | 36.40 ± 4.30 | 35.01 ± 3.51 | 35.95 ± 4.31 | 31.70 ± 3.87** |
| Testes (% BRW) | | | | | |
| Left | 90.64 ± 7.98 | 89.54 ± 8.70 | 85.60 ± 9.43* | 89.37 ± 7.47 | 82.55 ± 5.51* |
| Right | 91.29 ± 7.93 | 89.25 ± 8.69 | 85.03 ± 9.73** | 90.62 ± 8.08 | 82.89 ± 5.51** |
| Prostate | 54.23 ± 12.04 | 55.57 ± 10.92 | 51.64 ± 13.39 | 53.09 ± 13.51[29][b] | 47.3 ± 9.42 |
| Seminal Vesicle[c] (% BRW) | | | | | |
| With fluid | 87.72 ± 14.65 [29][b] | 93.44 ± 16.07 | 84.69 ± 13.94 | 87.46 ± 12.65 [29][b] | 88.27 ± 16.76 |
| Without fluid | 48.01 ± 9.76 [29][b] | 48.96 ± 10.94 | 46.94 ± 11.11 | 48.81 ± 7.34 [29][b] | 45.51 ± 8.98 |
| Pituitary | 0.73 ± 0.16 [26][b] | 0.75 ± 0.22 [27][b] | 0.75 ± 0.14 | 0.73 ± 0.2 | 0.63 ± 0.19 |

All weights are recorded in grams (g)
**significantly different from the vehicle control group value ($p \leq 0.01$)
*significantly different from the vehicle control group value ($p \leq 0.05$)
% BRW = (organ weight/brain weight) x 100
[a]excludes values for rats found dead
[b]excludes male rats that had organs damaged during processing or fluid loss before weighing
[c]includes the coagulating gland

Gross examination revealed that 9/28 males and 12/28 females in the F1 high dose group suffered blood clots in either the subdural or epidural region of the brain and these animals died between day 2 and 44 of the premating period. No treatment-related effects on reproductive parameters were observed. The mean pup weights at birth for the high dose group in both generations were not significantly different from those of the control group. However, by day 7 of the lactation period, the mean weights of the high dose group pups were less than those of the controls ($p<0.01$). Also the pups in the 320 ppm treatment group for the second generation (F1) demonstrated increased mortality between days 4 and 21 of lactation, but this was not noted in the P1 group. The authors noted no treatment-related lesions in parents of either generation. Overall, the authors reported that no adverse reproductive effects were indicated and the parental NOEL was 80 ppm (based upon the clinical signs, increased mortality, lower body weight and reduced food consumption noted for the 320 ppm treatment group). Exposures at this dose level were 5.4 to 5.8 mg/kg-day for males, and 5.2 to 10.6 mg/kg-day for females. According to the authors, the reproductive NOEL was estimated to be 320 ppm (no treatment-related effect on reproductive parameters at highest dose tested). Exposures at this dose level were 21.2 to 24.9 mg/kg-day for males, and 21.8 to 37.3 mg/kg-day for females. The developmental NOEL was 80 ppm (based upon lower mean pup body weights for both generations and increased mortality for the F1 pups during the lactation period in the 320 ppm treatment group).

***Husain and Seth, 1991. Neurotoxic effects of deltamethrin, a synthetic pyrethroid during early development in rats (Abstract only)***

Timed pregnant rats were administered deltamethrin (7.0 mg/kg) orally, daily from day 5 to 21 of gestation and neonates were exposed in a similar manner from day 22 to 37 postnatally. Controls of both the treatment groups received the vehicle in an identical manner (Husain et al., 1991). The pups exposed to deltamethrin during gestation showed reduced birth weight and growth rate. Also, ontogeny of various reflexes and developmental landmarks were delayed. A significant decrease in the activity of monoamine oxidase, Na+,(K+)-ATPase and acetylcholinesterase accompanied with an overall decrease in the levels of regional brain polyamines was reported. The neonates exposed to deltamethrin exhibited significant increase in monoamine oxidase, with an overall increase in polyamine concentration in several brain areas. Thus exposures at different times may have different effects. According to the authors, these results suggest that deltamethrin adversely affects morphogenesis, growth, maturation, and function of the brain. Also, the alterations in polyamine levels in specific brain regions by deltamethrin confirm the perturbations in maturation profiles of specific neuronal cell populations.

***Issam et al., 2009. Toxic responses to deltamethrin (DM) low doses on gonads, sex hormones and lipoperoxidation in male rats following subcutaneous treatments***

In this study, male rats in three groups (6 animals/group) were subcutaneously injected with deltamethrin (2 ppm for 30 days, 20 ppm for 45 days and 200 ppm for 60 days) and testes histopathology, sex hormones and oxidative stress were investigated (Issam et al., 2009).

The levels of exposure were as follows:

- Group 1: 0.003 mg/kg-day for 30 days
- Group 2: 0.003 mg/kg-day for 30 days; then 0.03 mg/kg-day for 15 additional days
- Group 3: 0.003 mg/kg-day for 30 days; then 0.03 mg/kg-day for 15 additional days and 0.3 for 15 more days
- Control rats were injected with an equivalent volume of solvent (70% ethanol) for 30, 45 or 60 days

The effect on testes histopathology, sex hormones and oxidative stress was examined. The authors reported that subcutaneous deltamethrin treatment produced an arrest of spermatogenesis and a significant decrease ($p \leq 0.05$) of plasma FSH concentration compared to controls after 45 and 60 days, but not after 30 days. Plasma LH was decreased significantly after 60 days as was testosterone. The findings were reported as graphs and photomicrographs and cannot be reproduced in this document. According to the authors, the significant decrease of FSH, LH and testosterone signal the hormonal system is targeted by deltamethrin and they question whether the steroidogenic acute regulatory (StAR) protein responsible for cholesterol transport across the outer mitochondrial membrane for testosterone production could be a target for deltamethrin. Also according to the authors,"… the disharmony in sex hormones and malondialdehyde (MDA) levels in rats that is related to dose, length of treatment and to the lipid peroxidation is thought to be one of the molecular mechanisms involved in deltamethrin-induced toxicity in the male gonads". Additionally, in the report the authors present histopathological effects such as condensed chromatin into pyknotic nuclei within germinall cells and interstitial tissue regression, desquamated cells in the lumen of seminiferous tubules, vacuolization within germ cells and apoptotic bodies in some tubules. Photomicrographs show these effects albeit not very clearly.

***Johri et al., 2006a. Effect of prenatal exposure of deltamethrin on the ontogeny of xenobiotic metabolizing cytochrome P450s in the brain and liver of offsprings***

Pregnant Albino Wistar rats received 0, 0.25, 0.5 or 1.0 mg/kg body weight of deltamethrin (Deltamethrin formulation, Decis 2.8% EC denotes 2.8% of technical grade deltamethrin (w/w) in emulsifiable concentrate), orally from GD5

to GD21. On the day of parturition, the average litter size was adjusted to eight per dam in all the groups with equal number of males and females and the male offsprings born to the control and treated dams were sacrificed on PND 0, 5, 10, 15, 20, 30, 40, 50, 60, 70 or 90. Liver and brain were immediately removed and snap frozen in liquid nitrogen and stored at −80 °C. The tissues were processed for isolation of RNA. According to the authors, prenatal exposure to low doses of deltamethrin produced dose-dependent alterations in the ontogeny of xenobiotic metabolizing cytochrome P450 (CYP) isoforms in brain and liver of the offspring. RT-PCR analysis revealed dose-dependent increase in the mRNA expression of cerebral and hepatic CYP1A1, 1A2, 2B1, 2B2, and 2E1 isoenzymes in the offspring. Also, the increase in expression of xenobiotic-metabolizing CYPs persistence up to adulthood in brain and liver of the exposed offspring, suggesting the potential of deltamethrin to imprint the expression of CYPs in brain and liver following in utero exposure. According to the authors, though the levels of CYPs were several fold lower in the brain, almost equal magnitude of induction in cerebral and hepatic CYPs suggests that brain CYPs are responsive to the induction by environmental chemicals. The present data indicating that alterations in the expression of xenobiotic metabolizing CYPs during development following prenatal exposure to deltamethrin may be of significance as these CYP enzymes are not only involved in the neurobehavioral toxicity of deltamethrin but have a role in regulating the levels of ligands that modulate growth, differentiation, and neuroendocrine functions.

***Johri et al., 2006b. Long lasting effects of prenatal exposure to deltamethrin on cerebral and hepatic cytochrome P450s and behavioral activity in rat offspring***

Fifty-seven (57) female rats were allowed to mate with 19 adult males (3:1) and on day zero of pregnancy (confirmed by a positive vaginal smear) the 54 rats that were pregnant were randomly divided into 3 batches of four groups each. Animals received either 0 (corn oil), 0.25, 0.5 or 1.0 mg/kg body weight of deltamethrin (Deltamethrin formulation, Decis 2.8% EC denotes 2.8% of technical grade deltamethrin (w/w) in emulsifiable concentrate), orally from GD5 to GD21 (Johri et al., 2006a). The doses selected for the study were based on earlier studies. On the day of parturition, the average litter size was adjusted to eight per dam in all the groups with equal number of males and females as far as possible. Male offspring born to control and treated dams were monitored for spontaneous locomotor activity and then sacrificed at postnatal age of 3, 6 or 9 weeks. The motor activity in terms of distance traveled, resting time, ambulatory time and horizontal count (the number of interruptions of the photometer beam during horizontal movement) were recorded. Liver and brain were immediately removed and processed for isolation of microsomes and total RNA.

Prenatal exposures to different doses (0.25, 0.5 or 1.0 mg/kg corresponding to 1/320$^{th}$, 1/160$^{th}$ or 1/80$^{th}$ of $LD_{50}$) of deltamethrin to pregnant Wistar rats from GD 5 to GD21 were found to produce a dose dependent increase in the activity of

cytochrome P450 (CYP) dependent 7-ethoxyresorufin-O-deethylase (EROD), 7-pentoxyresorufin-O-dealkylase (PROD) and N-nitrosodimethylamine demethylase (NDMA-D) in brain and liver of offspring postnatally at 3 weeks. The increase in the activity of cytochrome P450 monooxygenases was found to be associated with the increase in the mRNA and protein expression of xenobiotic metabolizing CYP1A, 2B and 2E1 isoenzymes in the brain and liver of offspring. According to the authors, dose-dependent alterations in the parameters of spontaneous locomotor activity in the offspring postnatally at 3 weeks indicated that an increase in cytochrome P450 activity may lead to the accumulation of deltamethrin and its metabolites to levels that may be sufficient to alter the behavioral activity of the offspring.

**Table A30. Dose-dependent effect of gestational deltamethrin exposure on brain and liver NDMA-d, EROD, and PROD activity in neonates at 3, 6, and 9 weeks**

| Dose (mg/kg) | NDMA-d[1] | | | | EROD[2] | | | | PROD[3] | | | |
|---|---|---|---|---|---|---|---|---|---|---|---|---|
| | Liver | | Brain | | Liver | | Brain | | Liver | | Brain | |
| | Control | Treated | Control | Treated | Control | Treated | Control | Treated | Control | Treated | Control | Treated |
| **3 wks** | | | | | | | | | | | | |
| 0.25 | 1.07±0.06 | 1.17±0.09 | 0.576±0.05 | 0.594±0.05 | 6.16±0.08 | 6.55±0.20 | 0.544±0.03 | 0.555±0.04 | 5.58±0.37 | 6.23±0.39 | 0.556±0.01 | 0.576±0.03 |
| 0.5 | 1.32±0.03 | 1.72±0.05* | 0.582±0.02 | 0.684±0.02* | 6.60±0.19 | 8.70±0.33* | 0.527±0.04 | 0.661±0.02* | 5.6±0.27 | 7.8±0.37* | 0.571±0.02 | 0.72±0.02* |
| 1 | 1.04±0.11 | 1.62±0.10* | 0.655±0.04 | 0.90±0.12* | 5.7±0.23 | 11.0±0.37* | 0.522±0.05 | 0.863±0.08* | 5.3±0.34 | 11.4±0.86* | 0.531±0.04 | 0.807±0.07* |
| **6 wks** | | | | | | | | | | | | |
| 0.25 | 1.41±0.05 | 1.48±0.06 | 0.770±0.04 | 0.781±0.08 | 30.5±1.01 | 31.4±0.99 | 0.697±0.03 | 0.706±0.04 | 14.7±0.067 | 15.5±0.58 | 0.648±0.02 | 0.661±0.04 |
| 0.5 | 1.44±0.03 | 1.63±0.02* | 0.765±0.03 | 0.805±0.06 | 30.3±0.09 | 37.9±1.14* | 0.684±0.01 | 0.785±0.02* | 15.6±0.51 | 19.5±1.13* | 0.634±0.02 | 0.650±0.02 |
| 1 | 1.43±0.08 | 1.85±0.06* | 0.75±0.05 | 0.893±0.03* | 28.4±1.44 | 49.1±6.25* | 0.712±0.04 | 0.864±0.03* | 14.6±1.29 | 21.0±1.78* | 0.639±0.02 | 0.674±0.05 |
| **9 wks** | | | | | | | | | | | | |
| 0.25 | 1.62±0.04 | 1.65±0.05 | 0.778±0.05 | 0.784±0.06 | 31.0±0.98 | 31.5±1.01 | 0.705±0.03 | 0.710±0.04 | 14.9±0.72 | 15.2±0.68 | 0.658±0.04 | 0.669±0.03 |
| 0.5 | 1.63±0.05 | 1.72±0.08* | 0.775±0.06 | 0.795±0.06 | 29.3±0.88 | 33.2±1.9* | 0.708±0.04 | 0.720±0.04 | 15.1±0.30 | 16.5±0.42* | 0.652±0.04 | 0.665±0.04 |
| 1 | 1.60±0.02 | 1.82±0.03* | 0.771±0.03 | 0.849±0.02 | 32.4±0.91 | 45.0±1.38* | 0.700±0.04 | 0.780±0.04 | 15.6±1.16 | 18.9±0.61* | 0.648±0.01 | 0.664±0.02 |

All values represent mean ± S.E.M. of six samples.
[1] Specific activity in nmoles formaldehyde/min/mg protein, [2]Specific activity in pmoles resorufin/min/mg protein
* $p<0.05$ when compared to control.

The inductive effect on cerebral and hepatic cytochrome P450s was found to persist postnatally up to 6 weeks in the offspring at the relatively higher doses (0.5 and 1.0 mg/kg) of deltamethrin and up to 9 weeks at the highest dose (1.0 mg/kg), though the magnitude of induction was less than that observed at 3 weeks. The authors concluded that alterations in the parameters of spontaneous locomotor activity in the offspring postnatally at 6 and 9 weeks, though significant only in the offspring at 3 and 6 weeks of age, indicate that, due to the reduced activity of the cytochrome P450s during the ontogeny, the pyrethroid or its metabolites accumulating in the brain may not be cleared from the brain, thereby leading to the persistence in the increase in the expression of cerebral and hepatic cytochrome P450s in the offspring postnatally up to 9 weeks. The data suggest that low dose prenatal exposure to deltamethrin has the potential to produce long lasting effects on the expression of xenobiotic metabolizing cytochrome P450s in brain and liver of the offspring.

***Kandil, 2006. Toxic effects of Deltamethrin on the Pregnant Rats and their Fetuses***

The effects of deltamethrin on pregnant rats were examined by Kandil, 2006. In this study, deltamethrin was given daily to Sprague-Dawley rats (10/group) by oral intubation in the form of emulsifiable concentrates (5%) at three dose levels from GD 8-16 and to another set of animals from GD 1-20. Two groups of control animals received distilled water during the same days of gestation (Kandil, 2006). The authors, reported that the doses corresponded to 1/100, 1/40 and 1/20 of the $LD_{50}$. Food intake and body weights of the animals were noted throughout the study. The pregnant rats were sacrificed on GD 20 and the uteri were dissected out and total implantation sites, number of resorptions sites and number of live and dead fetuses per group were noted.

The experimental groups were as shown in Table A31.

**Table A31. Experimental Groups in Study**

| GROUP | DOSE LEVEL | TIME OF EXPOSURE |
|---|---|---|
| C1 | Distilled water | GD 1-20 |
| C2 | Distilled water | GD 8-16 |
| G1A | 5.35 mg/kg-day ( 1/100 of $LD_{50}$) | GD 1-20 |
| G1B | 5.35 mg/kg-day ( 1/100 of $LD_{50}$) | GD 8-16 |
| G2C | 13.38 mg/kg-day ( 1/40 of $LD_{50}$) | GD 1-20 |
| G2D | 13.38 mg/kg-day ( 1/40 of $LD_{50}$) | GD 8-16 |
| G3E | 26.75 mg/kg-day ( 1/20 of $LD_{50}$) | GD 1-20 |
| G3F | 26.75 mg/kg-day ( 1/20 of $LD_{50}$) | GD 8-16 |

Fetuses were examined for external malformations and prepared for examination of skeletal and visceral defects per previously-published protocols. Photographs

of fetuses documenting external effects as well as skeletal and visceral effects were included in the article. Findings are described in Table A32 below.

**Table A32. Effect of deltamethrin on pregnant rats and their fetuses**

| Group | No of pregnant rats | % mortality | % Aborted | | Average weight of pregnant female (g) | | Average increase in weight (g) | Mean No of implantation sites | % of live fetuses | % of dead fetuses | % of resorbed fetuses | Crown-rump length (cm) | Average fetal body weight (g) | % of malformed fetuses | % of hematoma | % incomplete ossification |
|---|---|---|---|---|---|---|---|---|---|---|---|---|---|---|---|---|
| | | | Partial | Complete | GD 1 | GD 20 | | | | | | | | | | |
| C1 | 10 | 0 | - | - | 172.5 | 216.6 | 44.1±0.9 | 6.4 | 95.3 | - | 4.7 | 3.9±0.1 | 4.0±0 | - | 6.6 | 8.2 |
| C2 | 10 | 0 | - | - | 165.7 | 211.5 | 45.8±0.1 | 7.5 | 96 | - | 4.0 | 3.9±0.1 | 4.0±0.1 | - | 5.6 | 7.0 |
| G1A | 10 | 0 | 10 | - | 176.3 | 208.6 | 32.3±0.1 | 6.2 | 88.7 | - | 11.3 | 3.2±0.1 | 3.3±0 | 9.1 | 10.9 | 18.2 |
| G1B | 10 | 0 | - | 10 | 174.5 | 213.7 | 39.2±0.2 | 6.2 | 91.5 | - | 8.5 | 3.5±0.1 | 3.1±0.1 | 9.3 | 11.1 | 18.5 |
| G2C | 10 | 0 | 20 | 20 | 168.9 | 198.2 | 29.3±0.7 | 5.5 | 72.7 | - | 27.3 | 3.3±0.1 | 3.1±0.1 | 25 | 40.6 | 34.3 |
| G2D | 10 | 0 | 10 | 10 | 181.1 | 215.2 | 34.1±0.8 | 5.9 | 58.4 | 3.2 | 18.9 | 3.1±0.1 | 2.9±0.3 | 19.4 | 35.5 | 32.3 |
| G3E | 10 | 1 | 30 | 40 | 180.5 | 209.8 | 29.3±0.9 | 4.8 | 51.7 | 6.6 | 44.8 | 2.9±0.1 | 3.9±0.3 | 53.3 | 60 | 66.7 |
| G3F | 10 | 0 | 20 | 20 | 179.1 | 215.2 | 36.1±0.5 | 5.0 | 65 | 5 | 30 | 2.9±0.1 | 2.0±0.2 | 34.6 | 46.1 | 42.3 |

A decrease in maternal body weight gain was noted during gestation along with signs of lethargy and a decrease in uterine weight. An increase in the percentage of resorbed fetuses as well as malformed fetuses was noted in a dose-dependent manner. Other effects included a decrease in average body weight of the fetuses along with incomplete ossification. Statistical analysis of the data was not presented in the report and, as such, only summary data and brief descriptions of experimental methodology were available for evaluation. The authors postulated that the growth retardation of fetuses and their malformation may be due to the toxic effects of pyrethroids to the enzymes responsible for protein synthesis in rats and mice and their fetuses. Additionally, they also stated that the growth retardation and paralyisis of the fore limbs of the fetuses may be due to neurotoxicity of deltamethrin which could be related to the disturbance of the central transmitter system of glutamate.

***Kavlock et al., 1979. Toxicity studies with decamethrin, a synthetic pyrethroid insecticide***

Deltamethrin (identified in the study by its synonym, decamethrin) dissolved in corn oil was administered by gastric intubation at 0, 3, 6 or 12 mg/kg-day to pregnant CD-1 mice during GD 7-16 and at 0, 1.25, 2.5 or 5 mg/kg-day during GD 7-21 to Sprague-Dawley rats (Kavlock et al., 1979). Day 1 of pregnancy was the day that sperm was demonstrated in the vaginal smear. The animals were sacrificed on day 18 and day 21 of gestation in mice and rats, respectively, and subjected to standard teratological evaluation. An additional group of rats were exposed to decamethrin at 0, 2.5 or 5 mg/kg between GD 7- day 15 of lactation; the animals were allowed to deliver and offspring were culled at birth to yield 4 per sex and these were examined weekly for eye opening, startle reflex and air righting. At PND 22, males were discarded and females were examined on post-natal week 6 in a circular open field.

In the mouse, it appears that two replicate assays were conducted. A reduction in overall fecundity was observed in the first replicate assay (11/15 were pregnant in the control group versus, 4/14, 4/15, and 2/14 in low, mid and high dose groups, respectively). This effect appears to be less when the 2 assays were combined and reported by the authors as 17/30, 15/30, 10/30 and 9/30 overall (with a decrease to less than 50% in the control group in the second assay). Maternal weight gain was 58% less than control in the high dose group and most animals became convulsive soon after dosing. A significant ($p<0.01$) dose-related increase in the occurrence of supernumerary ribs was observed with no other skeletal or visceral abnormalities in mice at the high dose. In the rat, the authors reported a dose-related reduction ($p<0.01$) in maternal weight gain during pregnancy with the high dose group gaining only 80% of the control group's weight gain.

In this study no evidence of teratogenic activity was found in rats or mice at dose levels that produced marked maternal toxicity. Also, no persistent toxicity was

observed in neonatal rats that received perinatal exposure to decamethrin. While a dose-related depression in growth was observed in the pre-weaning period in the offpring of animals allowed to deliver, the decrease in weight did not affect the age of eye opening or the age at which the startle or righting reflexes occurred. No mutagenic activity was detected in three different *in vitro* assays, with or without metabolic activation.

**Table A33. Prenatal Effects of Deltamethrin in the CD-1 Mouse**

| | Dose (mg/kg-day) | | | |
|---|---|---|---|---|
| | 0 | 3 | 6 | 12 |
| **Maternal Observations:** | | | | |
| No. Inseminated | 30 | 30 | 30 | 30 |
| No. Died | 3 | 2 | 4 | 5 |
| No. Pregnant | 17 | 15 | 10 | 9 |
| Avg. Maternal Weight Gain (g) | 4.5±0.6[c] | 3.7±0.5 | 2.8±0.7 | 1.9±0.5 |
| Avg. Maternal Liver/Body Wt Ratio. | 6.5±0.1 | 6.8±0.4[D] | 6.7±0.1 | 6.6±0.3 |
| **Fetal Observations:** | | | | |
| Avg. No. Implants | 12.5±0.6 | 13.1±0.6 | 12.8±0.7 | 12.7±0.8 |
| Avg. % Mortality | 10.3±2.6 | 10.7±2.7 | 15.9±4.3 | 10.9±2.7 |
| Avg. Fetal Weight (g) | 0.94±0.03 | 0.96±0.05 | 0.87±0.05 | 0.92±0.04 |
| Avg. No. Sternal Ossification Centers | 5.5±0.1 | 5.3±0.2 | 4.7±0.6 | 5.4±0.3 |
| Avg. No. Caudal Ossification Centers | 3.3±0.2 | 3.3±0.2 | 2.7±0.4 | 3.5±0.6 |
| Avg. % Supernumerary Ribs | 13.3±6.2[B] | 23.4±5.2[E] | 47.1±12.4[E] | 28.2±7.0[D] |
| Visceral Abnormalities Enlarged Renal Pelvis | 6.5/11.8 | 1.2/6.7 | 3.8/10.0 | 0/0 |

[A] Represented as % fetuses affected/%litters affected
[B] Significant dose-related response, p<0.01
[c] Significant dose-related response, p<0.001; Jonckheere's test for dose-response analysis
[D] Significantly different from control value, p<0.05[E] Significantly different from control value, p<0.01; Mann-Whitney U –test for comparisons among treatment groups

**Table A34. Prenatal effects of Deltamethrin in the Sprague-Dawley Rat**

| | Dose (mg/kg-day) | | | |
|---|---|---|---|---|
| | 0 | 1.25 | 2.5 | 5 |
| **Maternal Observations:** | | | | |
| No. Inseminated | 32 | 29 | 32 | 37 |
| No. Died | 0 | 2 | 1 | 0 |
| No. Pregnant | 28 | 25 | 28 | 26 |
| Avg. Maternal Weight Gain (g) | 45.6±2.6[A] | 44.4±2.1 | 43.9±2.7 | 36.5±2.0 |
| Avg. Maternal Liver/Body Wt Ratio. | 4.4±0.1 | 4.6±0.1 | 4.5±0.1 | 4.6±0.1 |
| **Fetal Observations:** | | | | |
| Avg. No. Implants | 11.5±0.5 | 10.9±0.7 | 12.6±0.4 | 12.1±0.5 |
| Avg. % Mortality | 13.8±5.2 | 5.4±1.6 | 8.6±4.4 | 11.8±5.0 |
| Avg. Fetal Weight (g) | 3.4±0.1 | 3.6±0.1 | 3.6±0.1 | 3.6±0.1 |
| Avg. No. Sternal Ossification Centers | 5.3±0.1 | 5.2±0.1 | 5.3±0.1 | 5.3±0.1 |
| Avg. No. Caudal Ossification Centers | 4.0±0.1 | 4.0±0.1 | 4.0±0.1 | 3.8±0.2 |
| Avg. % Supernumerary Ribs | 7.2±2.4 | 22.6±5.2 | 10.0±2.8 | 18.0±4.8 |
| Visceral Abnormalities Enlarged Renal Pelvis[B] | 16.5/46.2 | 28.0/64.0 | 24.2/63.0 | 17.8/52.0 |
| Rhinencephaly | 0.7/3.8 | 0/0 | 0/0 | 0/0 |

[A] Significant dose-related response, $p<0.01$
[B] Represented as % fetuses affected/%litters affected

**Table A35. Postnatal Effects of Deltamethrin in the Sprague-Dawley Rat**

| | Sex | Dose (mg/kg-day) 0 | 2.5 | 5 |
|---|---|---|---|---|
| No. Females Delivered / No. Females Inseminated | | 10/12 | 8/14 | 11/14 |
| Avg. Litter Size | | 10.8±0.6 | 12.0±0.9 | 11.7±0.4 |
| Survivorship (%) | | | | |
| d8 | | 100 | 100 | 97.7 |
| d22 | | 100 | 98.4 | 94.1 |
| Weight (g) | | | | |
| d1 | M+F | 6.4±0.1 | 6.2±0.2 | 3.2±0.2 |
| d22 | M | 56.1±1.7[A] | 53.1±1.2 | 52.8±1.2 |
| | F | 52.8±1.9[A] | 51.2±1.1 | 49.0±1.3 |
| d43 | F | 158.4±4.2 | 154.5±3.3 | 152.8±4.3 |
| Startle Reflex (age at appearance – days) | M | 13.8±0.4 | 13.8±0.3 | 14.5±0.8 |
| | F | 13.2±0.3 | 14.0±0.3 | 13.7±0.3 |
| Eye Opening (age -days) | M | 15.9±0.6 | 16.1±0.3 | 16.1±0.3 |
| | F | 15.9±0.3 | 16.3±0.3 | 15.8±0.2 |
| Righting Reflex (age at appearance – days) | M | 17.6±0.2 | 18.6±0.4 | 18.2±0.3 |
| | F | 18.1±0.5 | 17.5±0.3 | 18.8±0.3 |
| Open Field Behavior No. Tested | | 20 | 16 | 22 |
| **d1** | | | | |
| Rearings | | 25.8±2.4 | 25.7±3.6 | 26.4±1.9 |
| Defecations | | 2.9±0.6[A] | 2.7±0.7 | 1.5±0.3 |
| Total Activity | | 112.9±7.0 | 101.7±7.9 | 109.3±4.5 |
| Internal Acivity (%) | | 6.2±1.0 | 9.3±1.4 | 8.7±1.1 |
| **d2** | | | | |
| Rearings | | 14.7±1.9 | 16.1±2.7 | 18.2±1.4 |
| Defecations | | 1.5±0.5 | 1.7±0.5 | 1.4±0.3 |
| Total Activity | | 86.3±8.0 | 69.6±8.8 | 87.7±7.6 |
| Internal Acivity (%) | | 8.6±1.5 | 8.5±1.5 | 10.4±1.5 |

[A] Signficant dose-related response, $p<0.05$

***Lazarini et al., 2001. Effects of prenatal exposure to deltamethrin on forced swimming behavior, motor activity, and striatal dopamine levels in male and female rats***

Seventeen nulliparous female rats (groups of three animals each) were placed overnight with one young male rat (previously determined to be fertile) and onset of pregnancy was confirmed by the presence of spermatozoa in vaginal smears on the following morning, designated as GD0. On GD6, the dams were divided into two groups. One group (experimental group, n = 9) was treated orally by gavage once a day from GD6 to GD15 with 0.08 mg/kg of deltamethrin and the other group (control group, n = 8) received the same treatment, only with vehicle (formulation not revealed: 1 ml/kg, 1:50 solution, w/v). The pregnant rats were weighed at GD1, GD5, GD6, GD15 and GD21 and food and water consumption during pregnancy, length of gestation, litter size and sex ratio were also assessed. All the pregnant rats were allowed to give birth and nurture their offspring normally. No cross-fostering procedure was used. Parturition day was determined to be PN0. On PN1, all litters were examined externally, sexed and weighed. Litters were organized in groups of eight pups, four males and four females, and the remaining pups were discarded. Litters were weighed at PN1, PN7, PN14 and PN21. The following reflexes were assessed in one male and one female of each litter: surface righting reflex (normal ventral position assumed after being placed on its back for 15 s, beginning on Day 1), negative geotaxis (a minimum 90° turn after being placed face down on a 45° inclined platform for 30 s, beginning on Day 2) and palmar grasp reflex (pup grasps a paper clip with forepaws if stroked). Pups were observed daily, separated from the mothers at the moment of observation and immediately returned to their home cages. Mean day of appearance for each of the parameters above was calculated. All data were analyzed considering the litter as the smallest unit. All tests were carried out during the same period of time (9:00–11:00 a.m.). On PN21, the offspring were weaned and the littermates were housed together, only separated by sex. Only one animal of each gender from each litter was used for the behavioral and biochemical tests in adult age.

The effects of prenatal exposure of rat pups to 0.08 mg/kg deltamethrin on physical, reflex and behavioral developmental parameters, on forced swimming and open-field behaviors, and on striatal monoamine levels at 60 days of age were observed. Some of these are noted in Tables A36 and A37.

**Table A36. Latency and time to float during the forced swimming behavior test in adult rats prenatally exposed to deltamethrin (0.08 mg/kg)**

| Groups: | Males | | Females | |
|---|---|---|---|---|
| | Control (n = 10) | Experimental (n = 10) | Control (n=8) | Experimental (n=8) |
| Parameters: | | | | |
| LF | 13.1 ± 4.3 | 3.2 ± 1.2* | 1.9 ± 0.7# | 1.0 ± 0.5 |
| FT | 91.8 ± 16.0 | 97.2 ± 11.6 | 58.4 ± 16.9# | 57.2 ± 9.8# |

Values are represented as means ± S.E.M.
LF: latency to float (sec).
FT: floating time (sec).
* $p < 0.05$ different from respective control group.
# $p < 0.05$ different from male of respective group (Tukey).

Maternal and offspring body weight, physical and reflex development were unaffected by the exposure to deltamethrin. At 21 days of age, open-field locomotion frequency and immobility duration of male and female offspring were not different between control and exposed animals. However, male rearing frequency was increased in experimental animals. A decreased immobility latency to float and in general activity after the swimming test in male offspring was observed at adult age while no interference was detected in the float duration during the swimming test. These findings were presented graphically in the article and are not included in this report.

**Table A37. Striatal NA, MHPG, DA, DOPAC, HVA, 5-HT and 5-HIAA concentrations (ng/g) in male and female rats exposed to DTM (0.08 mg/kg) during the organogenic period**

| | **Males** | | **Females** | |
|---|---|---|---|---|
| | **Control (n = 8)** | **Experimental (n = 7)** | **Control (n = 5)** | **Experimental (n=8)** |
| NA | 99.6 ± 18.9 | 249.3 ± 173.4* | 35.9 ± 11.3 | 33.2 ± 12.3# |
| MHPG | ND | ND | 57.4 ± 4.8 | 61.2 ± 3.5 |
| MHPG/NA | – | – | 1.7 ± 0.5 | 2.1 ± 0.8 |
| DA | 9416.3 ± 980.6 | 9279.7 ± 1552.7 | 9732.9 ± 323.3 | 11107.6 ± 740.6# |
| DOPAC | 1509.5 ± 166.3 | 2191.5 ± 235.4* | 1042.8 ± 87.7# | 1323.7 ± 218.2# |
| HVA | 483.2 ± 119.2 | 529.2 ± 125.2 | 419.8 ± 63.3 | 434.3 ± 65.8# |
| DOPAC/DA | 0.16 ± 0.02 | 0.24 ± 0.02* | 0.11 ± 0.01# | 0.12 ± 0.02# |
| HVA/DA | 0.01 ± 0.01 | 0.01 ± 0.01 | 0.05 ± 0.01 | 0.04 ± 0.01 |
| 5HT | 1318.2 ± 123.4 | 1291 ± 197.7 | 943.3 ± 73.03 | 763.8 ± 233.1# |
| 5-HIAA | 550.6 ± 471.8 | 413.6 ± 272 | 584.9 ± 44.2 | 555.7 ± 127.1 |
| 5-HIAA/5HT | 0.43 ± 0.45 | 0.32 ± 0.17 | 0.63 ± 0.09 | 0.76 ± 0.23# |

Data are represented as means ± S.E.M. ND= nondetectable levels.
* $p < .05$ compared to the respective control group.
# $p < .05$ different from male of respective group.

In addition, these animals showed higher striatal 3,4-dihydroxyphenylacetic acid (DOPAC) levels without modification in dopamine (DA) levels and an increased DOPAC/DA ratio. These data indicate a higher activity of the dopaminergic system in these animals. Noradrenaline (NA) levels were increased, while MHPG levels were not detectable in the system studied. Serotonin (5-HT) and 5-hydroxyindolacetic acid (5-HIAA) levels, as well as the homovanillic acid (HVA)/DA ratio, were not modified by the exposure to the pesticide. No changes were observed in swimming and open-field behaviors nor were there any changes in striatal monoamines or their metabolites in the female experimental group. According to the authors, the present data showing that prenatal exposure to deltamethrin alters latency to float and the activity of striatal dopaminergic system might reflect a persistent effect on animal motor activity, mainly in males, and the decrease in general activity observed in experimental male rats suggests higher levels of emotionality induced by previous exposure to the swimming behavior test in relation to control animals. The authors further elaborate that forced swimming is an inescapably stressful situation causing a relatively short escape reaction followed by floating without performing any activity. Thus, animals submitted to this test might show high emotionality levels, and this may cause the reduced latency to float. Thus, the most important response to increased emotionality in the open field is freezing behavior, with a consequent decrease in locomotion frequency parallel to an increase in immobility. In the present experiment, animals observed in the open field were previously submitted to the swimming test and hence, it is possible that the decreased locomotion frequency and the increased immobility observed in male rats prenatally exposed to deltamethrin were consequences of high levels of emotionality induced by the prenatal exposure to the pyrethroid. The authors conclude that prenatal exposure to a low dose of deltamethrin alters offspring emotionality, motor and dopaminergic activity systems and might reflect a persistent effect.

***Lazarini et al., 2007. Prenatal deltamethrin low dose effects on physical development of rats***

The relationship between deltamethrin maternal exposure during the organogenic period in rats and the occurrence of prenatal and postnatal physical alterations was investigated. Twenty-four nulliparous female rats were distributed into groups of two animals each and placed overnight with one young male rat, previously determined to be fertile. The onset of pregnancy was confirmed by the presence of spermatozoa in vaginal smears on the following morning, designated as GD0. On GD6, the dams were distributed into two groups. One group (experimental group, n = 12) was treated orally via gavage once a day from GD6 to GD15 with 0.08 mg/kg of deltamethrin. The second group (vehicle group, n = 12) received the same treatment, only with deltamethrin vehicle 1 mL/kg (formulation not reported, 1:50 solution, w/v). These pregnant rats were weighed at GD1, GD6 to GD15, and GD21. On GD 21 all dams were anesthetized and their uterine horns removed; the number of *corpora lutei*, implants, resorptions, live and dead fetuses were recorded. The placenta and the fetuses were weighed and examined for macroscopic external malformations (Lazarini et al., 2007). Half of each litter was fixed in Bouin´s solution for

subsequent visceral examination according to Wilson´s method (Wilson, 1965), and the other half was stained with Alizarin red according to the technique of Staples and Schnell (Staples et al., 1964) to reveal alterations of the skeleton. The degree of ossification was evaluated using the parameters proposed by Aliverti et al. (Aliverti et al., 1979). Additionally, 17 nulliparous female rats were placed overnight with young male rats previously determined to be fertile (three females/one male). The onset of pregnancy was confirmed by the presence of spermatozoa in vaginal smears on the following morning, designated as GD0. On GD6, the dams were divided into two groups. One group (experimental group, n = 9) was treated once a day from GD6 to GD15 with 0.08 mg/kg of deltamethrin. The other group (control group, n = 8) received the same treatment, only with vehicle. These rats were weighed at GD1, GD5, GD6, GD15 and GD21. All the pregnant rats were allowed to give birth and nurture their offspring normally. No cross-fostering procedure was used. Parturition day was determined to be PND 0. On PND1 all litters were examined externally, sexed and weighed. Litters were organized in groups of 8 pups, 4 males and 4 females, and the remaining pups were discarded. Litters were weighed at PND1, PND7, PND14 and PND21. The following physical parameters of development were observed daily: pinna detachment (beginning PND 2), incisor eruption (beginning PND 6), testis descent (beginning PND 15), and eye (beginning PND 10) and vaginal openings (beginning PND 30). Pups were observed daily, between 9:00 and 11:00 a.m., separated from the mothers at the moment of observation and immediately returned to their home cages. Mean day of appearance for each of the parameters above was calculated. All data were analyzed considering the litter as the smallest unit. On PND21, the offspring were weaned and the littermates were housed together, separated by sex and treatment.

Results showed no skeletal and visceral interferences induced by prenatal deltamethrin exposure; however, a delay in the day of eyes opening for male and female offspring exposed was observed. In addition, the females presented early vaginal channel opening (findings were presented graphically). Thus, according to the authors, since findings from other researchers have demonstrated that administration of epidermal growth factor (EGF) to newborn mice accelerates the eyes opening as well as delays vaginal opening, it is possible that prenatal exposure to deltamethrin could inhibit the expression of EGF and thus delay eye opening and hasten vaginal opening. Further, because there was no other evidence of general developmental delay, the authors suggested a specific effect of the pesticide on this physical landmark. According to the authors, since both parameters depend on epidermal growth factor (EGF) it is possible that this mechanism is underlying the developmental effects of prenatal exposure to the low dose deltamethrin exposure in the study and suggest that the delay in eye opening and vaginal opening acceleration observed should be a consequence of CYPs induction by deltamethrin prenatal exposure on EGF.

***Lemos et al., 2011. Response of blastocyst-endometrium interactions in albino rats to sublethal doses of biological and synthetic insecticides***

In this study, morphological, histochemical and histomorphometric characteristics of the sublethal effects of deltamethrin or the biological insecticide XenTari® on blastocyst–endometrium interactions in albino female rats were compared. Thirty-five pregnant albino (Wistar lineage) rats received daily doses of 1.0, 2.0 or 4.0 mg/kg deltamethrin (in the formulation Decis® 25CE) by oral gavage immediately following the confirmation of copulation. The same number of rats received daily doses of 185, 1850 or 3700 mg/kg of the biological insecticide, XenTari®. Animals were sacrificed on the seventh day of pregnancy. The seventh day of pregnancy is when the blastocyst is totally inserted in the endometrium. Control animals received water. The uterine horns containing the implantation sites were collected and examined for the number of implantation sites, as well as histological and morphometric assessment. A nonparametric test was used for statistical analysis due to the number of samples (n=5). The Kruskal–Wallis test was used for mother's weight, number of implantation sites and vascularization morphometry data. Mean values were compared using the Wilcoxon-Mann–Whitney test ($\alpha = 0.05$).

The implantation sites in the control group were well-developed and composed of trophoblasts (some with mitotic activity), polyploidy cytotrophoblasts, and rich vascularization. The 1.0 mg/kg dose of deltamethrin and the 185 and 1850 mg/kg doses of XenTari® did not cause histological changes in the implantation sites or decidua. However, at the 2.0 mg/kg dose of deltamethrin, leukocyte infiltration occurred in the region of the implantation site. Significant histological changes occurred after the use of the 4.0 mg/kg dose of deltamethrin and the 3700 mg/kg dose of Xen-Tari®.

The rats treated with the higher doses of insecticides exhibited a significant reduction in the number of implantation sites (Table A38), vacuolated trophoblast cells, rare cytotrophoblasts, accentuated leukocyte infiltration, increase in vascularization of sites and blood in the uterine lumen. The decidua was more fibrous, particularly in the rats treated with the highest dose of XenTari®.

**Table A38. Means ± Standard Deviation of the number of implantation sites in the experimental groups**

| Groups | N | Means* |
|---|---|---|
| Controls | 5 | 14.0 ± 1.58a |
| 1.0 mg/kg deltamethrin | 5 | 13.0 ± 1.23ab |
| 2.0 mg/kg deltamethrin | 5 | 11.6 ± 1.14abc |
| 4.0 mg/kg deltamethrin | 5 | 8.20 ± 4.71c |
| 185 mg/kg XenTari® | 5 | 11.2 ± 0.83abc |
| 1850 mg/kg XenTari® | 5 | 11.2 ± 2.28abc |
| 3700 mg/kg XenTari® | 5 | 9.4 ± 1.14bc |

C.V. = 19.22%.
N = number of repetitions per treatment; degrees of freedom (DF) = 6; statistics ($F^P$) = $4.004^{0.0051}$.
* Means followed by the same letter do not differ.

There were no statistically significant differences in weights of rats throughout the study between groups, or in the number of blood vessels in the implantation sites between groups (Table A39).

**Table A39. Means number ± Standard Deviation of points charged on the blood vessels in the implantation sites of the experimental groups**

| Groups | N | Means* |
|---|---|---|
| Control | 5 | 58.16 ± 1.59a |
| 1.0 mg/kg deltamethrin | 5 | 59.46 ± 2.50a |
| 2.0 mg/kg deltamethrin | 5 | 57.70 ± 1.88a |
| 4.0 mg/kg deltamethrin | 5 | 59.04 ± 5.28a |
| 185 mg/kg XenTari® | 5 | 55.82 ± 2.47a |
| 1850 mg/kg XenTari® | 5 | 57.22 ± 4.10a |
| 3700 mg/kg XenTari® | 5 | 61.60 ± 2.10a |

C.V. = 4.8%.
N = number of repetitions per treatment; degrees of freedom (DF) = 6; statistics ($F^P$) = $9.361^{0.1543}$.
* Means followed by the same letter do not differ.

The authors concluded that the highest doses of both deltamethrin and XenTari® produced histopathological alterations in the implantation sites as well as a reduction in the number of sites in female rats, thereby compromising the implantation process.

***Lemos et al., 2012. Effect of sub-lethal doses of Bacillus thuringiensis subsp. Aizawai and deltamethrin with regard to fertility and organ toxicity in pregnant albino rats***

Seventy pregnant albino rats were analyzed with regard to fertility and histopathology of the kidneys, liver and lungs as well as the morphology of the neonates in this study.

Female rats that exhibited three regular cycles were randomly divided into seven groups of ten, five of which were treated through the 7$^{th}$ day of pregnancy for the analysis of the kidneys, liver and lungs, and the other five were treated throughout pregnancy for the fertility analysis. The seven treatment groups were as follows: (1) controls, (2) 18.5 mg XenTari®/100g, (3) 185 mg XenTari®/100g, (4) 370 mg XenTari®/100g, (5) 1.0 mg deltamethrin/kg, (6) 2.0 mg deltamethrin/kg, and (7) 4.0 mg deltamethrin/kg. Deltamethrin was administered in the formulation Decis® 25CE. Treatments were administered daily by oral gavage.

For the analysis of the kidneys, liver, and lungs, five females from each group were sacrificed on the 7$^{th}$ day of pregnancy. Organs were collected and histologically examined. For the morphological analysis of neonates, the remaining females from each group were allowed to birth their pups, which were counted, weighted, measured from head to tip of tail and macroscopically analyzed for malformations of the head, trunk, and limbs. These data were subjected to the non-parametric Kruskal-Wallis test. The level of significance was set at $\alpha = 0.05$.

The analysis revealed histopathological alterations in all organs analyzed in both treatments, and alterations were dose dependent. In the kidneys of rats that received 4.0 mg deltamethrin/kg or 370 mg XenTari®/kg, there was hemosiderin depositing, necrosis and vacuolar degeneration of the convoluted tubules and collector ducts, membranous, proliferative glomerulonephritis and a significant reduction in Bowman's spaces compared to the control. In the liver of rats treated with 2.0 or 4.0 mg deltamethrin/kg, there was congestion, vacuolar degeneration of hepatocytes, hyperplasia of the Kupffer cells, with focal points in the portal triads exhibiting cholangitis compared to the control group. In the lungs of rats treated with 2.0 and 4.0 mg deltamethrin, there was thickening of the septa, characterizing moderate interstitial pneumonia, with an inflammatory reaction around the bronchioles and vessels, exhibiting the characteristic peribronchioloar infiltrate; multi-focal pneumonia by macrophages was also diagnosed, distributed in different areas of the lobule in comparison to the control group.

No miscarriages occurred, and the neonates did not exhibit signs of malformation of the head, limbs, thorax or abdomen (Table A40). However, there were a

smaller number of pups in the groups that received higher doses of the insecticides in comparison to the control group.

**Table A40. Mean (± Standard Deviation) number, length, and weight of neonates in experimental groups**

| Group | Number | Length | Weight |
|---|---|---|---|
| G 1 (control) | 12.00 ± 1.58a | 6.17 ± 0.28a | 6.14 ± 0.41a |
| G 2 | 11.60 ± 0.89a | 5.92 ± 0.37a | 5.57 ± 0.34a |
| G 3 | 8.60 ± 1.67ab | 6.30 ± 0.05a | 5.80 ± 0.31a |
| G 4 | 6.20 ± 1.09b | 6.16 ± 0.69a | 5.97 ± 0.96a |
| G 5 | 8.20 ± 2.20ab | 6.15 ± 0.95a | 6.19 ± 0.56a |
| G 6 | 7.80 ± 1.48ab | 6.32 ± 0.26a | 6.10 ± 0.30a |
| G 7 | 4.80 ± 2.58b | 6.52 ± 0.35b | 6.31 ± 0.84a |
| $F^P$ statistic[a] | $24.489^{0.0004}$ | $9.489^{0.1479}$ | $6.606^{0.3589}$ |

[a] Means followed by the same letter do not differ significantly from one another (Wilcoxon-Mann-Whitney test; $p<0.05$).

Sublethal doses of both insecticides produced similar lesions in the kidneys, liver and lungs and reduced the fertility of rats.

***Oda and El-Maddawy, 2011. Protective effect of vitamin E and selenium combination on deltamethrin-induced reproductive toxicity in male rats***

This study assessed the adverse effects of deltamethrin on reproductive organs and fertility in male rats and evaluated the protective role of a combination of vitamin E (VE) and selenium (Se) in alleviating the detrimental effect of deltamethrin on male fertility. The authors treated adult male Wistar rats (10 weeks old) orally (intra-gastrically) with a commercial deltamethrin-based pesticide “Butox® 5%EC” alone or in combination with subcutaneous injection of a VE and Se mixture containing 1.67 mg Se and 150 mg VE per ml (trade name “Viteselen® 15”). To estimate the lethal dose 50 ($LD_{50}$) of the pesticide used in the study, the authors treated four groups of rats (six per group) orally with 1, 3, 5, or 7 mg/kg deltamethrin for an unspecified period of time. A control group of six rats was included “throughout the entire experimental period,” but it was not clear if the animals in the control group were treated with the vehicles. The detailed data on $LD_{50}$ were not reported, but the authors stated in the abstract that the $LD_{50}$ of deltamethrin for male rats was estimated at 6 mg/kg. In addition, the doses reported in the study appeared to be the amount of deltamethrin (the active ingredient of the pesticide), not the amount of the pesticide formulation, although the authors did not specify. In the experiment to assess the reproductive effects of deltamethrin following 60 days of exposure, ten rats in the deltamethrin-only group were treated by gavage with 0.6 mg/kg-day deltamethrin (1/10 of the $LD_{50}$). Another group of 10 rats were treated by gavage daily with 0.6 mg/kg deltamethrin, and concurrently via subcutaneous injection twice per week with 1.2 mg/kg Viteselen® 15. Rats (a total of 10) in the control group received 2 ml/day of distilled water (vehicle for the pesticide) by gavage and 2

ml/day of saline (vehicle for Viteselen® 15). The authors did not report any data on general toxicity, including body weights. They found that treatment with deltamethrin alone caused statistically-significant reductions in the relative weights of testis, epididymis, and accessory sex organs (seminal vesicles and prostate combined). Compared to the control group, epididymal sperm count, motility, and viability, and serum levels of testosterone were reduced significantly ($p<0.05$). The percentage of epididymal sperm with abnormal morphology in the deltamethrin-treated group was statistically significant higher (30.67%) than that in the control group (8.67%). Deltamethrin treatment also reduced the serum level of testosterone and level of glutathione (GSH) in testicular tissues, and increased the testicular level of malondialdehyde (MDA), indicating increased activity of lipid peroxidation. The testis, epididymis, prostate, and seminal vesicles of rats receiving deltamethrin treatment showed severe degenerative changes. Co-treatment with Viteselen®15 attenuated the adverse effects of deltamethrin, including improvement in all the parameters assessed and the histopathological changes in the testis, epididymis, prostate, and seminal vesicles. Detailed data on the parameters assessed in the study are shown in Table A41.

**Table A41. Male reproductive effects of Deltamethrin and the protective effects of VE and Se in combination**

| Treatment | Control | Deltamethrin | Deltamethrin + Viteselen |
|---|---|---|---|
| **Dosing methods** | Oral (H2O) & S.c. (saline) | Oral | s.c injection |
| **Doses** | 2 ml H2O and 2 ml saline | 0.6 mg/kg-day | 1.2 mg/kg, twice per week |
| **Relative organ weights** | | | |
| Testis | 1.59±0.02a | 1.07±0.03c | 1.34±0.04b |
| Epididymis | 0.71±0.02a | 0.51±0.02c | 0.62±0.01b |
| Accessory glands | 0.80±0.01a | 0.64±0.01c | 0.72±0.01b |
| **Sperm parameters** | | | |
| Counts ($10^6$/ml) | 330.33±7.9a | 210.00±8.66c | 266.67±4.41b |
| Motility (%) | 95.00±2.89a | 46.67±6.67b | 81.67±1.67a |
| Abnormal sperm (%) | 8.67±0.33c | 30.67±2.33a | 15.33±1.45b |
| Alive sperm (%) | 94.00±1.15a | 73.00±2.89c | 84.67±2.40b |
| **Biochemical analysis** | | | |
| Serum testosterone (ng/ml) | 2.30±0.06a | 1.02±0.01c | 2.13±0.04b |
| GSH (µmol/g testicular tissue) | 10.17±0.03a | 5.92±0.14c | 8.23±0.20b |
| MDA (nmol/ g testicular tissue | 4.36±0.23c | 10.88±0.51a | 6.25±0.28b |
| **Histopathological Evaluation** | | | |
| Testis | Normal | Germ cell degeneration; sloughing of seminiferous epithelium | Attenuated histopathological changes |
| Epididymis | Normal | Reduced sperm number in the lumen; mononuclear cell infiltration in the interstitial tissues; epithelial sloughing | Attenuated histopathological changes |
| Prostate | Normal | Interstitial tissue congestion and edema; lack of luminal secretion | Nearly normal morphology |
| Seminar vesicles | Normal | Interstitial tissue congestion, edema, leukocyte infiltration; degeneration in epithelial cells | Nearly normal morphology |

*: All values are expressed as mean±S.E. Values with different letters at the same raw are significantly different at $p<0.05$ by ANOVA with Duncan's multiple range test.

***Richard, 2001. Deltamethrin: prenatal developmental toxicity study by oral route (gavage) in rabbits***

Pregnant NZW rabbits, 24 does/group, were dosed by gavage at 0 (corn oil, 1.5 ml/kg), 3, 10, or 32 mg/kg-day on GD 6 to 28 in a standard developmental toxicity study per FIFRA guidelines (Richard, 2001). One high dose (32 mg/kg-day) female fetus had cleft palate and another female fetus in the same group from another doe had a missing ulna. No dose-related malformations or variations were noted. In the control group, two animals died while aborting; in the 3 mg/kg-day group 2 animals died and at the 32 mg/kg-day group five animals died (1 after gavage, 2 found dead, 1 while aborting and 1 sacrificed after evidence of abortion). Slight decrements in food consumption and body weight gain in the does at the high dose level were observed from day 6- 21 and the authors determined the maternal NOEL to be 10 mg/kg-day and the developmental NOEL to be 32 mg/kg-day.

***Salem et al., 1988. Effect of organophosphorus (dimethoate) and pyrethroid (deltamethrin) pesticides on semen characteristics in rabbits***

In this study Salem et al. examined the effect of chronic treatment with two sublethal doses of dimethoate (organo-phosphorus pesticide) or deltamethrin (pyrethroid pesticide) on body weight and semen characteristics in adult male rabbits (Salem et al., 1988). Fifteen mature male Bauscat rabbits at 8 months of age and about 3.34 kg BW were divided into 5 groups (3 animals/group) for the study. One group served as the control group and two were tested for exposure to dimethoate and the other two were exposed to deltamethrin at $1/10^{th}$ $LD_{50}$ and $1/100^{th}$ $LD_{50}$ via gelatin capsule. The $LD_{50}$ was not stated. Semen was collected twice weekly from all the animals for 18 weeks. The first 6 weeks was the pretreatment period, followed by 6 weeks of exposure to the chemical and the last 6 weeks was the recovery period when the chemical was not administered.

Assessments of live, dead and abnormal spermatozoa were made using an eosin-aniline blue staining.

Pesticide treatment resulted in a decline in body weight, libido, ejaculate volume, sperm concentration and semen initial fructose. Also noted was an increase in abnormal and dead sperm and methylene blue reduction time, with dimethoate showing greater effects than deltamethrin. The results were all presented as graphs and the actual values were not available. The report stated that the percent increases in abnormal and dead sperm were highest at the end of the treatment period and declined gradually till the end of the recovery period, and remained higher than those before pesticide treatment. The hazardous effect of these pesticides on semen quality continued during the post-treatment period, and was dose-dependent. According to the authors, this deleterious effect on sperm formation together with the decline in libido suggests a decrease in

testosterone secretion by pesticide treatment and also that the effects of both these pesticides are long-lasting.

### *Schardein, 1990a. Developmental Toxicity Study of Deltamethrin in Rats*

Deltamethrin technical (purity of 99.2%) was administered by oral gavage to 25 mated female Crl:CD®VAF/Plus rats/sex/dose at levels of 0 (2 groups), 1 (2 groups), 3.3 (2 groups), 7 or 11 mg/kg-day from GD 6 through 15 (Schardein, 1990a). The incidence of mortality- (deaths and moribund sacrifice) at 3.3, 7 and 11 mg/kg-day was 1, 1 and 14, respectively.

The authors reported that the death at 3.3 mg/kg was probably not compound-related but no justification was provided. At the high-dose, convulsions (9/25), anogenital staining (5/25), abnormal vocalization (3/25), and sensitivity to external stimuli (6/25) were observed. Reduced maternal weight gain and clinical signs at mid- and high-dose levels resulted in a maternal NOEL of 3.3 mg/kg-day and a developmental NOAEL of 11 mg/kg due to no evidence of developmental and fetal toxicity at any dose level tested.

### *Schardein, 1990b. Developmental Toxicity Study of Deltamethrin in New Zealand White Rabbits*

Deltamethrin technical (purity of 99.2%) was administered by oral gavage to16 inseminated New Zealand White SPF female rabbits/dose at levels of 10, 25 and 100 mg/kg-day from GD 6 through 15 (Schardein, 1990b).

The authors reported that one high-dose doe died on GD 27 with congestion of the lungs. No dose-related malformations were reported, but variations among the high-dose pups included wrist flexure and retardation of ossification in hyoid body, pubic bones and unossified tail bones resulting in a developmental NOEL = 25 mg/kg based on retardation of bone ossification. Since maternal effects were noted at the high dose, the maternal NOEL was also determined to be 25 mg/kg-day. According to the author the effects observed did not constitute developmental toxicity.

**Table A42. Summary of the Incidence of Fetal Developmental Variations**

| Dose level (mg/kg-day) | 0 | 10 | 25 | 100 |
|---|---|---|---|---|
| | | | | |
| | No. of fetuses (No. of litters) | | | |
| Number of litters examined | 12 | 12 | 10 | 13 |
| Number of fetuses examined skeletally | 74 | 93 | 86 | 96 |
| Carpal Flexure | 1 (1) | 1 (1) | 2 (2) | 2 (1) |
| Rigid flexure | | | | 3 (2) |
| Tarsal flexure | | | | 1 (1) |
| Left carotid arises from innominate | 2 (1) | 9 (4) | 12 (9) | 1 (1) |
| Azygous lobe of lung absent | | 1 (1) | 1 (1) | |
| Gall bladder hypoplasia | 1 (1) | | 1 (1) | 2 (2) |
| Hyoid Body unossified | 1 (1) | 8 (3) | 10 (3) | 19 (5) |
| Hyoid arches bent | 4 (4) | 8 (6) | 2 (2) | 4 (2) |
| 27 Presacral vertebrae | 6 (4) | 28 (8) | 18 (7) | 31 (9) |
| Greater than 12 pairs of full ribs | 32 (9) | 48 (12) | 43 (9) | 53 (11) |
| 13$^{th}$ rudimentary rib(s) | 10 (5) | 17 (7) | 8 (5) | 12 (7) |
| Sternabrae #5 and/or #6 unossified | 5 (4) | 9 (6) | 25 (5) | 21 (5) |
| Misaligned sternebra(e) | 1 (1) | | | 1 (1) |
| Extra sternabra | 1 (1) | 1 (1) | | |
| Pubic bone(s) unossified | | 3 (1) | 1 (1) | 10 (3) |
| Tail unossified | | 4 (2) | 4 (2) | 16 (4) |
| | | | | |
| Total fetuses (litters) with variations | 50 (12) | 75 (12) | 63 (10) | 86 (13) |

***Shukla and Taneja, 2000. Mutagenic evaluation of deltamethrin using rodent dominant lethal assay***

Animals were exposed orally to three different doses (0.36, 0.72 or 1.08 mg/kg body weight) of deltamethrin dissolved in corn oil (Shukla et al., 2000). The experiment was conducted for 8 weeks (including 2 weeks of subacute exposure to deltamethrin to avoid its high dose toxicity), as follows:

- Group I: 0.1 ml corn oil (vehicle) daily for 2 weeks
- Group II: Deltamethrin 0.36 mg/kg body weight in 0.1 ml corn oil, daily for 2 weeks (cumulative dose 5.04 mg/kg body weight)
- Group III: Deltamethrin 0.72 mg/kg body weight in 0.1 ml corn oil, daily for 2 weeks (cumulative dose 10.08 mg/kg body weight)
- Group IV: Deltamethrin 1.08 mg/kg body weight in 0.1 ml corn oil, daily for 2 weeks (cumulative dose 15.1 mg/kg body weight).

After 2 weeks of treatment, each treat and control male was mated with untreated females, every week for a period of 6 weeks to cover the entire

spermatogenic cycle. All mated females were sacrificed on the 13th day of separation and their ovaries and uterus were examined.

**Table A43. Fertilization and pregnancy status in dominant lethal test with deltamethrin**

| Dose (mg/kg) Treated for 2 weeks | Test Weeks | No. of females mated | No. of females pregnant | Total implants/female Mean± SE | Mating Index (%) |
|---|---|---|---|---|---|
| Control (Vehicle) | 1 | 18 | 16 | 9.40±0.29 | 88.89 |
| | 2 | 18 | 14 | 9.90±0.27 | 77.78 |
| | 3 | 18 | 17 | 9.12±0.36 | 94.45 |
| | 4 | 16 | 16 | 9.29±0.42 | 100.00 |
| | 5 | 18 | 17 | 8.90±0.39 | 94.45 |
| | 6 | 18 | 18 | 9.08±0.38 | 100.00 |
| 0.36 (5.04)[a] | 1 | 18 | 14 | 8.49±0.27* | 77.78 |
| | 2 | 18 | 18 | 9.68±0.34 | 100.00 |
| | 3 | 16 | 16 | 8.97±0.29 | 100.00 |
| | 4 | 18 | 16 | 8.84±0.34 | 88.89 |
| | 5 | 18 | 18 | 8.93±0.36 | 100.00 |
| | 6 | 18 | 17 | 8.04±0.40 | 94.45 |
| 0.72 (10.08)[a] | 1 | 18 | 16 | 9.94±0.29 | 88.89 |
| | 2 | 17 | 17 | 8.65±0.33* | 100.00 |
| | 3 | 16 | 14 | 9.46±0.32 | 87.50 |
| | 4 | 18 | 16 | 8.30±0.36 | 88.89 |
| | 5 | 17 | 17 | 8.10±0.39 | 100.00 |
| | 6 | 18 | 16 | 8.84±0.41 | 88.89 |
| 1.08 (15.1)[a] | 1 | 18 | 15 | 9.67±0.39 | 83.33 |
| | 2 | 18 | 14 | 8.72±0.36* | 77.78 |
| | 3 | 17 | 13 | 8.17±0.33 | 76.45 |
| | 4 | 17 | 14 | 8.76±0.47 | 82.35 |
| | 5 | 18 | 17 | 8.72±0.29 | 94.45 |
| | 6 | 17 | 12 | 7.93±0.39 | 70.59 |

*Significantly different from controls ($p<0.05$); [a]Values in parentheses show cumulative dose

**Table A44. Corpora lutea, living and dead implants in Swiss mice after deltamethrin treatment**

| Dose (mg/kg) Treated for 2 weeks | Test Weeks | Living implants/female Mean± SE | Dead implants/female Mean± SE | Corpora Lutea /female Mean± SE |
|---|---|---|---|---|
| Control (Vehicle) | 1 | 9.14±0.18 | 0.26±0.16 | 9.60±0.28 |
| | 2 | 9.75±0.32 | 0.25±0.12 | 10.21±0.36 |
| | 3 | 8.87±0.36 | 0.25±0.13 | 9.34±0.32 |
| | 4 | 9.03±0.29 | 0.26±0.15 | 9.42±0.29 |
| | 5 | 8.66±0.37 | 0.24±0.15 | 9.12±0.26 |
| | 6 | 8.86±0.22 | 0.22±0.14 | 9.22±0.32 |
| 0.36 (5.04)[a] | 1 | 8.21±0.38 | 0.28±0.16 | 8.70±0.41 |
| | 2 | 9.36±0.31 | 0.32±0.15 | 9.22±0.37 |
| | 3 | 8.72±0.34 | 0.25±0.15 | 9.23±0.42 |
| | 4 | 8.40±0.29 | 0.44±0.17 | 9.00±0.39 |
| | 5 | 8.71±0.26 | 0.22±0.14 | 9.11±0.29 |
| | 6 | 7.81±0.29* | 0.23±0.12 | 8.20±0.28 |
| 0.72 (10.08)[a] | 1 | 9.56±0.43 | 0.40±0.18 | 10.11±0.41 |
| | 2 | 8.27±0.41* | 0.38±0.17 | 8.72±0.36 |
| | 3 | 8.74±0.29 | 0.72±0.28 | 9.60±0.29 |
| | 4 | 7.93±0.32 | 0.37±0.17 | 8.51±0.27 |
| | 5 | 7.84±0.25 | 0.26±0.16 | 8.26±0.32 |
| | 6 | 8.59±0.52 | 0.25±0.12 | 8.96±0.34 |
| 1.08 (15.1)[a] | 1 | 9.41±0.43 | 0.26±0.13 | 9.81±0.35 |
| | 2 | 8.29±0.41* | 0.43±0.28 | 8.84±0.27 |
| | 3 | 7.37±0.20** | 0.98±0.30* | 8.32±0.29 |
| | 4 | 8.47±0.32 | 0.29±0.15 | 8.93±0.32 |
| | 5 | 8.40±0.25 | 0.33±0.16 | 8.99±0.35 |
| | 6 | 7.75±0.52 | 0.18±0.12 | 8.12±0.29 |

[a] Values in parentheses show cumulative dose
*Significantly different from controls (p<0.05)
**Significantly different from controls (p<0.01)

**Table A45. Dominant lethal mutation induced by deltamethrin**
**All values represent average of 6 weeks**

| Dose (mg/kg) Treated for 2 weeks | Total implants/female Mean± SE | Living implants/female Mean± SE | Dead implants/female Mean± SE | Pre-implantation loss/female Mean± SE | Mutagenic Index/female Mean± SE |
|---|---|---|---|---|---|
| Control (Vehicle) | 9.28±0.14 | 9.05±0.15 | 0.23±0.02 | 2.62±0.70 | 2.74±0.29 |
| 0.36 (5.04)[a] | 8.82±0.2.2 | 8.53±0.21 | 0.29±0.03 | 2.23±0.16 | 3.24±0.36 |
| 0.72 (10.08)[a] | 8.88±0.28 | 8.48±0.25 | 0.39±0.07 | 1.60±0.19 | 4.34±0.71 |
| 1.08 (15.1)[a] | 8.66±0.24 | 8.26±0.29 | 0.38±0.08 | 1.92±0.23 | 4.47±0.79 |

[a] Values in parentheses show cumulative dose

The results in Table A44 revealed that deltamethrin treatment did not impair the mating capacity and fertility of the mice. The number of dead implants per female was low in the first 2 and last 3 weeks of post treatment with about a threefold increase in the third week of post treatment (0.72 ± 0.28 in medium; not significant and 0.98 ± 0.30 in high doses of deltamethrin as compared to 0.25± 0.13 in control; $p<0.05$). This, according to the authors, was indicative of an effect on late spermatid stages of male mice. Mutagenic index and pre- and post-implantation losses were also assessed. No significant pre-implantation losses were observed either weekly or on an average basis. Post-implantation losses were observed at medium and high doses of deltamethrin and a slight increase in the dominant lethal mutation rate was observed with increasing doses of deltamethrin in early weeks but decreased in later weeks. A significant decrease ($p\leq 0.05$) in the mean total number of implants per female was noted on week 1 for the low dose (0.36 mg/kg), week 2 for the mid-dose (0.72 mg/kg), and week 2 for the high dose of 1.08 mg/kg with a decreasing trend though not significant for all other time points. According to the authors, some increase in number of dead implants in the third week (late spermatid stage) implies that a chromosomal non-dysjunctional and clastogenic event occurred in the second meiotic cell division when secondary spermatocytes develop into spermatids.

While the average values gives the overall effect of deltamethrin on the entire 6 weeks of the spermatogenic cycle, data for specific weeks showed that the mutagenic index per female was increased in the third week (7.64 ± 2.13 in medium and 8.90 ± 2.95 in high doses as compared to 2.95 ± 1.43 in the control). Also, the total and living implants appeared to decrease (4-5%) and the dead implants and mutagenic index to increase (3-4%) though this was not statistically significant. The authors showed in a graph a slight increase in dominant lethal mutation rate at the medium (5%) and high dose (7.5%) at the third week, which decreased thereafter. Overall, deltamethrin was found to exert a weak dominant lethal effect in the mid-week (third week) of spermatogenic cycle in medium and high dose-treated animals, although the authors commented that the potency of the mutation rate noted for deltamethrin was much less than other mutagenic and carcinogenic compounds like benzo(a)pyrene and methylmethane sulfonate which have shown pre-fertilization defects and higher mutation rates of 20-30% in male germ cells at low doses.

### *Wrenn, 1980. Three Generation Reproduction Study in Rats*

In a three generation reproduction study in rats, deltamethrin technical (lot 22, purity not stated) was administered in the diet to 10 male and 20 female Charles River CD rats about 76 days before mating, during the mating period, during gestation and through weaning for three generations at levels of 0, 2, 20 and 50 ppm (Wrenn, 1980).

Decreased mean parental body weight of the parental (P1) males in the 50 ppm dosage group and slight reductions in mean food consumption in 50 ppm first

generation (F1) males and second generation (F2) females were noted. This resulted in a parental NOEL = 20 ppm. Reduced mean pup body weights at lactation day 21 were observed in F1, F2 and F3 litters. No adverse effects on the reproductive system were observed at any dosage level tested, resulting in a reproductive NOEL of 50 ppm. The study had severe limitations such as lack of test article purity, the lack of adequate dose level justification and absence of full histopathology of parental animals.