Long-term Health Effects of Exposure to Ethylbenzene

Background and Status of Ethylbenzene as a Toxic Air Contaminant and its Potential Carcinogenicity

Ethylbenzene (CAS Registry Number: 100-41-4) is a natural constituent of crude petroleum and is found in gasoline and diesel fuels (HSDB, 2003). It is used as a chemical intermediate, primarily in the production of styrene (ATSDR, 1999). Ethylbenzene is included on a list of "inert" or "other ingredients" found in registered pesticide products (U.S. EPA, 2004a).

Ethylbenzene enters the atmosphere both from emissions from industrial facilities and other localized sources, and from mobile sources. Vehicle exhaust contains ethylbenzene due to its presence in fuel and possibly due to formation during the combustion process. Ethylbenzene is a component of environmental tobacco smoke (CARB, 1997) and a number of consumer products (ATSDR, 1999), resulting in its presence as a contaminant of indoor air.

The statewide annual emissions of ethylbenzene in California were estimated to be 116 tons (232,000 lb) from stationary point sources and 9,892 tons (19.7 million lb) from area sources, including on and off-road mobile sources (CARB, 2004). U.S. EPA's Toxics Release Inventory reported 7,463,252 pounds total on- and off-site releases of ethylbenzene for the year 2002 in the U.S., of which 6,441,052 pounds were fugitive or point source air emissions (U.S. EPA, 2004b).

The average statewide ambient air concentration of ethylbenzene in 2003 was 0.22 ppb (0.96 $\mu g/m^3$) with a range of 0.1 to 2.0 ppb (503 observations, CARB, 2005).

The primary route of atmospheric transformation for ethylbenzene is reaction with the OH radical. For a 24-hr average OH radical concentration of 1.0×10^6 molecule cm^{-3}, the calculated lifetime of ethylbenzene is 1.7 days (Arey and Atkinson, 2003). Observed products of ethylbenzene reaction with the OH radical include acetophenone and benzaldehyde (Hoshino *et al.*, 1978).

Ethylbenzene is identified under the section 112(b)(1) of the U.S. Clean Air Act amendment of 1990 as a Hazardous Air Pollutant (HAP). This followed the U.S. EPA's determination that ethylbenzene is known to have, or may have, adverse effects on human health or the environment. On April 8, 1993, the California Air Resources Board (ARB) identified, by regulation, all 189 of the then listed HAPs as Toxic Air Contaminants (TACs). This was in response to the requirement of Health and Safety Code Section 39657(b).

Non-cancer health effects of ethylbenzene have been recognized for some time, and these were the basis for a Chronic Inhalation Reference Exposure Level (cREL) developed by OEHHA (2000) for use in the Air Toxics Hot Spots (AB2588) program. The cREL

adopted was 2000 $\mu g/m^3$ (400 ppb), based on effects in the alimentary system (liver), kidney and endocrine system.

Summary of Carcinogenic Health Effects of Ethylbenzene

Maltoni *et al.* (originally reported in 1985; additional information published in 1997) studied the carcinogenicity of ethylbenzene in male and female Sprague-Dawley rats exposed via gavage. The authors reported increases in the percentage of animals with malignant tumors and with tumors of the nasal and oral cavities associated with exposure to ethylbenzene. Reports of these studies lacked detailed information on the incidence of specific tumors, statistical analysis, survival data, and information on historical controls. Results of the Maltoni *et al*. studies were considered inconclusive by IARC (2000) and NTP (1999).

Because of the potential for significant human exposure to ethylbenzene, NTP (1999) carried out inhalation studies in $B6C3F_1$ mice and F344/N rats. NTP found clear evidence of carcinogenic activity in male rats and some evidence in female rats, based on increased incidences of renal tubule adenoma or carcinoma in male rats and renal tubule adenoma in females. NTP (1999) also noted increases in the incidence of testicular adenoma in male rats. Increased incidences of lung alveolar/bronchiolar adenoma or carcinoma were observed in male mice and liver hepatocellular adenoma or carcinoma in female mice, which provided some evidence of carcinogenic activity in male and female mice (NTP, 1999).

IARC (2000) classified ethylbenzene as Group 2B, possibly carcinogenic to humans, based on the NTP studies. The State of California's Proposition 65 program listed ethylbenzene as a substance known to the state to cause cancer on June 11, 2004. In view of the NTP data and the identification of ethylbenzene as known to the state to cause cancer, it is appropriate to provide a cancer risk estimate for ethylbenzene for use in the Toxic Air Contaminants program. The following summary (to be included as an addendum to the *Air Toxics Hot Spots Program Risk Assessment Guidelines: Part II, Technical Support Document for describing available Cancer Potency Factors)* provides an analysis of the carcinogenicity data for ethylbenzene, and derives a cancer potency factor $(mg/kg\text{-}d)^{-1}$ and unit risk factor $(\mu g/m^3)^{-1}$ for use in risk assessments of environmental exposures to ethylbenzene.

References

Agency for Toxic Substances and Disease Registry (ATSDR). 1999. Toxicological Profile for Ethylbenzene. PB/99/16647. U.S. Department of Health and Human Services, Public Health Service. ATSDR, Atlanta, GA. Available at: http://www.atsdr.cdc.gov/toxprofiles/tp110-p.pdf.

Arey J and Atkinson R. 2003. Photochemical reactions of PAHs in the atmosphere. In: PAHs: An Ecotoxicological Perspective, Ed. P.E.T. Douben, John Wiley & Sons Ltd., pp. 47-63.

California Air Resources Board (CARB). 1997. Toxic Air Contaminant Identification List Summaries. Environmental Tobacco Smoke. Available at: http://www.arb.ca.gov/toxics/tac/factshts/envtoba.pdf.

California Air Resources Board (CARB). 2004. California Air Toxics Emissions database query, July 19, 2004. Stationary Source Division, Air Quality Measures Branch, Substance Evaluation Section.

California Air Resources Board (CARB). 2005. Annual Statewide Toxics Summary. Ethylbenzene. Available at: http://www.arb.ca.gov/adam/toxics/statepages/ebzstate.html.

Hazardous Substances Data Bank (HSDB) 2003. National Library of Medicine, Bethesda, MD. Available at http://sis.nlm.nih.gov. Last revision date for ethylbenzene summary listed as 03/05/2003.

Hoshino M, Akimoto H and Okuda M. 1978. Photochemical oxidation of benzene, toluene, and ethylbenzene initiated by OH radicals in the gas phase. Bull Chem Soc Jpn 51:718-724.

International Agency for Research on Cancer (IARC). 2000. Monographs on the Evaluation of Carcinogenic Risks to Humans. Some Industrial Chemicals. Vol. 77, p. 227-266. IARC, Lyon, France.

Maltoni C, Conti B, Giuliano C and Belpoggi F. 1985. Experimental studies on benzene carcinogenicity at the Bologna Institute of Oncology: Current results and ongoing research. Am J Ind Med 7:415-446.

Maltoni C, Ciliberti A, Pinto C, Soffritti M, Belpoggi F and Menarini L. 1997. Results of long-term experimental carcinogenicity studies of the effects of gasoline, correlated fuels, and major gasoline aromatics on rats. Annals NY Acad Sci 837:15-52.

National Toxicology Program (NTP). 1999. Toxicology and Carcinogenesis Studies of Ethylbenzene (CAS No. 100-41-4) in F344/N Rats and in B6C3F$_1$ Mice (Inhalation Studies). Technical Report Series No. 466. NIH Publication No. 99-3956. U.S. Department of Health and Human Services, Public Health Service, National Institutes of Health. NTP, Research Triangle Park, NC.

U.S. Environmental Protection Agency (U.S. EPA). 2004a. Complete List of all "Inert" or "Other Ingredients" Found in Pesticide Products Registered by EPA. Available at: http://www.epa.gov/opprd001/inerts/completelist_inerts.pdf. Accessed 7/19/04; last revision date not available.

ETHYLBENZENE

CAS No: 100-41-4

I. PHYSICAL AND CHEMICAL PROPERTIES (From HSDB, 2003)

Molecular weight	106.2
Boiling point	136.2°C
Melting point	-94.9°C
Vapor pressure	9.6 mm Hg @ 25°C
Air concentration conversion	1 ppm = 4.35 mg/m^3 @ 25°C

II. HEALTH ASSESSMENT VALUES

Unit Risk:	2.5 x 10-6 (µg/m3)-1
Inhalation Cancer Potency:	0.0087 (mg/kg-day)-1
Oral Cancer Potency:	0.011 (mg/kg-day)-1

The unit risk and cancer potency values for ethylbenzene were derived from the National Toxicology Program (NTP, 1999) male rat renal tumor data, using the linearized multistage (LMS) methodology with lifetime weighted average (LTWA) doses. Methods are described in detail below. The use of a physiologically-based pharmacokinetic (PBPK) model to derive internal doses for the rodent bioassays was explored. Unit risk and cancer potency values based on the PBPK internal doses were not markedly different than those based on the LTWA doses, and involved a number of assumptions. Because the PBPK modeling is uncertain and the results were relatively insensitive to the approach used, the LMS results based on the LTWA doses were selected as most appropriate.

III.METABOLISM and CARCINOGENIC EFFECTS

Metabolism

Ethylbenzene is rapidly and efficiently absorbed in humans via the inhalation route (ATSDR, 1999). Human volunteers exposed for 8 hours to 23-85 ppm retained 64% of inspired ethylbenzene vapor (Bardodej and Bardodejova, 1970). Gromiec and Piotrowski (1984) observed a lower mean uptake value of 49% with similar ethylbenzene exposures. There are no quantitative oral absorption data for ethylbenzene or benzene in humans but studies with [^{14}C]-benzene in rats and mice indicate gastrointestinal absorption in these species was greater than 97% over a wide range of doses (Sabourin *et al*., 1987).

Most of the metabolism of ethylbenzene is governed by the oxidation of the side chain (Fishbein, 1985). Engstrom (1984) studied the disposition of ethylbenzene in rats exposed to 300 or 600 ppm (1305 or 2610 mg/m^3) for six hours. Engstrom assumed 60 percent absorption of inhaled ethylbenzene and calculated that 83% of the 300 ppm dose

was excreted in the urine within four hours of exposure. At the higher exposure of 600 ppm only 59 percent of the dose was recovered in the urine within 48 hr of exposure. Fourteen putative ethylbenzene metabolites were identified in the urine of exposed rats. The principal metabolites were 1-phenylethanol, mandelic acid, and benzoic acid. Metabolism proceeded mainly through oxidation of the ethyl moiety with ring oxidation appearing to play a minor role. Other metabolites included acetophenone, ω-hydroxyacetophenone, phenylglyoxal, and 1-phenyl-1, 2-ethandiol. Ring oxidation products include p-hydroxy- and m-hydroxyacetophenone, 2-ethyl- and 4-ethylphenol. With the exception of 4-hydroxyacetophenone all these other metabolites were seen only in trace amounts.

The metabolism of ethylbenzene was studied in humans (number unstated) exposed at 23 to 85 ppm (100 to 370 mg/m^3) in inhalation chambers for eight hours (Bardodej and Bardodejova, 1970). About 64 percent of the vapor was retained in the respiratory tract and only traces of ethylbenzene were found in expired air after termination of exposure. In 18 experiments with ethylbenzene, the principal metabolites observed in the urine were: mandelic acid, 64%; phenylglyoxylic acid, 25%; and 1-phenylethanol, 5%.

Engstrom *et al.* (1984) exposed four human male volunteers to 150 ppm ethylbenzene (653 mg/m^3) for four hours. Urine samples were obtained at two-hr intervals during exposure and periodically during the next day. Metabolites identified in the 24-hr urine included: mandelic acid, 71.5 ± 1.5%; phenylglyoxylic acid, 19.1 ± 2.0%; 1-phenylethanol, 4.0 ± 0.5%; 1-phenyl-1, 2-ethanediol, 0.53 ± 0.09%; acetophenone, 0.14 ± 0.04%; ω- hydroxyacetophenone, 0.15 ± 0.05%; m-hydroxyacetophenone, 1.6 ± 0.3%; and 4-ethylphenol, 0.28 ± 0.06%. A number of the hydroxy and keto metabolites were subject to conjugation. Differences were observed between the concentrations obtained with enzymatic and acid hydrolysis. For example, 50% of maximal yield of 4-ethylphenol was obtained with glucuronidase or acid hydrolysis and 100% with sulfatase indicating the presence of glucuronide and sulfate conjugates of this metabolite. Alternatively, acetophenone gave only 30-36% yield with enzymatic treatment but 100% with acid hydrolysis indicating the presence of other conjugates not susceptible to glucuronidase or sulfatase. The metabolic scheme proposed by Engstrom *et al.* (1984) is shown in Figure 1.

Gromiec and Piotrowski (1984) measured ethylbenzene uptake and excretion in six human volunteers exposed at concentrations of 18 to 200 mg/m^3 for eight hours. Average retention of ethylbenzene in the lungs was 49 ± 5% and total excreted mandelic acid accounted for 55 ± 2% of retained ethylbenzene.

Tardif *et al.* (1997) studied physiologically-based pharmacokinetic (PBPK) modeling of ternary mixtures of alkyl benzenes including ethylbenzene in rats and humans. As part of this investigation they determined Vmax and Km kinetic parameters for the rat by best fit of model simulations to the time-course data on the venous blood concentrations of ethylbenzene following single exposures. The maximal velocity (Vmax) was 7.3 mg/hr-kg body weight and the Michaelis-Menten affinity constant (Km) was 1.39 mg/L. For the

human PBPK model the Vmax value from the rat was scaled on the basis of (body weight)$^{0.75}$. All other chemical and metabolic parameters were unchanged.

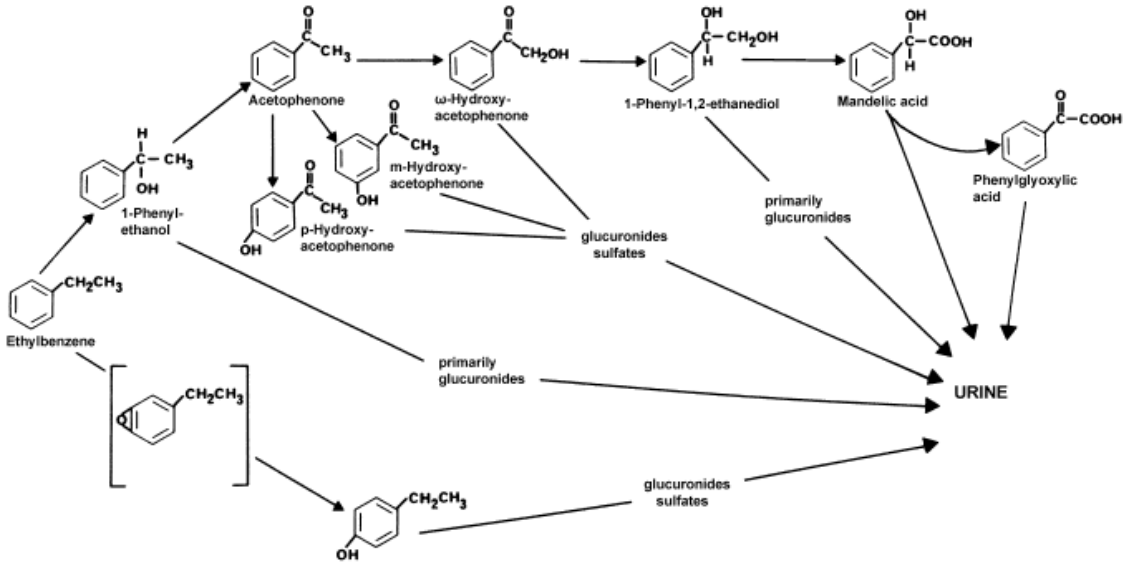

Figure 1. Human Ethylbenzene Metabolism (adapted from Engstrom et al., 1984).

The scaling of rodent metabolism of alkylbenzenes to humans was evaluated using kinetic data in an exposure study with human volunteers. Four adult male subjects (age, 22-47; body weight, 79-90 kg) were exposed to 33 ppm ethylbenzene for 7 hr/d in an exposure chamber. Urine samples were collected during (0-3 hr) and at the end (3-7 hr) of exposure and following exposure (7-24 hr). For the 0-24 hr collections mandelic acid amounted to 927 ± 281 μmol and phenylglyoxylic acid 472 ± 169 μmol. Venous blood (5.5 to 8 hr) and expired air (0.5 to 8 hr) were also measured in the subjects and exhibited good correspondence with PBPK model predictions. It is interesting that the metabolism of ethylbenzene in these human subjects was not significantly affected by simultaneous exposure to the other alkyl benzenes (toluene and xylene) studied. The metabolic parameters for ethylbenzene used by Haddad *et al.* (2001) and in the internal dosimetry modeling presented below were based on this study.

The oxidation of ethylbenzene to 1-phenylethanol by human liver microsomes and recombinant human cytochrome P450s was investigated by Sams *et al.* (2004). Human liver microsomes from seven subjects (four male, three female, age 37-74) and microsomes expressing recombinant human CYP1A2, 2A6, 2B6, 2C9*1(Arg144), 2C19, 2D6, 2E1, and 3A4 co-expressed with cytochrome P450 reductase/cytochrome b5 were both obtained from commercial sources. Kinetic experiments were conducted with microsomes and ethylbenzene over a 10-5000 μ*M* substrate concentration range. For chemical inhibition experiments, selective inhibitors of specific CYP isoforms were used to obtain maximum inhibition of the target CYP with minimum effect on other CYPs. Eadie-Hofstee plots (V vs. V/S) indicated that the reaction of ethylbenzene to 1-

phenylethanol with human liver microsomes was biphasic with low and high affinity components. The Michaelis-Menten equation was fit to the data and kinetic constants obtained by regression analysis. One microsome preparation was found to give a noticeably less curved Eadie-Hofstee plot and metabolized ethylbenzene at a much higher rate than the other preparations (Vmax = 2922 pmol/min/mg). It was excluded from the statistical analysis. For the high affinity reaction the mean Vmax was 689 ± 278 pmol/min/mg microsomal protein and the Km = 8.0 ± 2.9 μ*M* (n = 6). For the low affinity reaction the Vmax was 3039 ± 825 pmol/min/mg and Km = 391 ± 117 μ*M* (n = 6). The intrinsic clearance values of Vmax/Km were 85.4 ± 15.1 and 8.3 ± 3.0 for the high and low affinity reactions, respectively. The high affinity component of pooled human liver microsomes was inhibited 79%-95% by diethyldithiocarbamate, and recombinant CYP2E1 metabolized ethylbenzene with a low Km of 35 μ*M* and low Vmax of 7 pmol/min/pmol P450, indicating that the CYP2E1 isoform catalyzed this component. Recombinant CYP1A2 and CYP2B6 exhibited high Vmaxs (88 and 71 pmol/min/pmol P450, respectively) and Km's (502 and 219 μ*M*, respectively), indicating their role in the low affinity component. The mean Vmax and Km values above were used by OEHHA in addition to those from Haddad *et al.* (2001) in our human PBPK modeling of ethylbenzene.

Charest-Tardif *et al*. (2006) characterized the inhalation pharmacokinetics of ethylbenzene in male and female B6C3F1 mice. Initially groups of animals were exposed for four hr to 75, 200, 500 or 1000 ppm ethylbenzene. Subsequently groups of animals were exposed for six hr to 75 and 750 ppm for one or seven consecutive days. The maximum blood concentration (Cmax, mean (± SD), n = 4) observed after four hr exposure to 75, 200, 500 and 1000 ppm was 0.53 (0.18), 2.26 (0.38), 19.17 (2.74), and 82.36 (16.66) mg/L, respectively. The blood AUCs were 88.5, 414.0, 3612.2, and 19,104.1 (mg/L)-min, respectively, in female mice, and 116.7, 425.7, 3148.3, 16039.3 (mg/L)-min, respectively in male mice. The comparison of Cmax and kinetics of ethylbenzene in mice exposed to 75 ppm indicated similarity between 1 and 7-day exposures. However, at 750 ppm elimination of ethylbenzene appeared to be greater after repeated exposures. Overall, the single and repeated exposure PK data indicate that ethylbenzene kinetics is saturable at exposure concentrations above 500 ppm but is linear at lower concentrations.

Backes *et al*. (1993) demonstrated that alkylbenzenes with larger substituents (e.g., ethylbenzene, m-, p-xylene, n-propylbenzene) were effective inducers of microsomal enzymes compared to those with no or smaller substituents (benzene, toluene). Cytochrome P450 2B1 and 2B2 levels were induced with the magnitude of induction increasing with hydrocarbon size. P450 1A1 was also induced but less than 2B. A single intraperitoneal (i.p.) dose of 10 mmol/kg in rats was selected for optimum induction response with no overt toxic effects.

Bergeron *et al*. (1999) using the same daily dose of ethylbenzene for up to ten days observed changes in expression of CYP 2B1, 2B2, 2E1, and 2C11. While CYP 2C11 and 2E1 were attenuated by repeated dosing of ethylbenzene, CYP 2Bs were elevated after initial dosing despite the absence of detectable 2B1 or 2B2 mRNA. The authors

interpreted this observation as the initial ethylbenzene dose leading to an increase in ethylbenzene clearance and an overall decrease in tissue ethylbenzene levels with repeated dosing and decreased induction effectiveness.

Serron *et al*. (2000) observed that treatment of rats with ethylbenzene (i.p., 10 mmol/kg) led to increased free radical production by liver microsomes compared to corn oil controls. Oxygen free radical generation was measured *in vitro* by conversion of 2', 7'-dichlorofluorescein diacetate (DCFH-DA) to its fluorescent product 2', 7'-dichlorofluorescein (DCF). A significant elevation (40%) of DCF was seen despite lack of effect on overall P450 levels. The DCF product formation was inhibited by catalase but not by superoxide dismutase suggesting a H_2O_2 intermediate. Anti-CYP2B antibodies inhibited DCF production indicating involvement of CYP2B. As noted above ethylbenzene treatment induces increased production of CYP2B.

While the doses in these studies were quite high at over 1000 mg/kg-d by the intraperitoneal route, earlier studies by Elovaara *et al*. (1985) showed P450 induction in livers of rats exposed to 50, 300 and 600 ppm (218, 1305 and 2610 mg/m^3) for 6 hours/day, 5 days/week for up to 16 weeks. So it is possible that the types of effects discussed above, notably the production of reactive oxygen species via induced CYP 2B, may have occurred during the cancer bioassays.

Genotoxicity

***In vitro* and *in vivo* animal studies**

Ethylbenzene has been tested for genotoxicity in a variety of *in vitro* and *in vivo* genotoxicity assays. Those studies have been reviewed by ATSDR (1999). Ethylbenzene has not demonstrated genotoxicity in *Salmonella* reverse mutation assays. Those studies are listed in Table 1. All studies were performed in the presence and absence of metabolic activation (rat liver S9), and were negative. It has not been tested in *Salmonella* strains sensitive to oxidative DNA damage.

Table 1. Ethylbenzene *Salmonella* reverse mutation studies

Test strains	Reference
TA98, TA100, TA1535, TA1537	Florin *et al*., 1980
TA98, TA100, TA1535, TA1537, TA1538	Nestmann *et al*., 1980
TA98, TA100, TA1535, TA1537, TA1538	Dean *et al*., 1985
TA97, TA98, TA100, TA1535	NTP, 1986
TA97, TA98, TA100, TA1535	NTP, 1999
TA98, TA100	Kubo *et al*., 2002

Ethylbenzene also did not induce mutations in the WP2 and WP2uvrA strains of *Escherichia coli* in the presence and absence of metabolic activation (Dean *et al*., 1985), or in *Saccharomyces cerevisiae* strains JDl (Dean *et al*., 1985), XVl85-14C, and D7 as measured by gene conversion assays (Nestmann and Lee, 1983).

Ethylbenzene has been observed to induce mutations in L5178Y mouse lymphoma cells at the highest nonlethal dose tested (80 µg/mL) (McGregor *et al*., 1988; NTP, 1999). However, NTP noted significant cytotoxicity at this dose level (relative total growth was reduced to 34% and 13% of the control level in each of two trials).

Data on the ability of ethylbenzene to induce chromosomal damage in non-human mammalian cells are negative. Ethylbenzene did not cause chromosomal damage in rat liver epithelial-like (RL4) cells (Dean *et al*., 1985). Additionally, ethylbenzene did not induce an increase in either sister chromatid exchanges (SCE) or chromosomal aberrations in Chinese hamster ovary (CHO) cells in the presence or absence of metabolic activation (NTP 1986, 1999).

The frequency of micronucleated erythrocytes in bone marrow from male NMRI mice exposed to ethylbenzene by intraperitoneal injection was not significantly increased compared to controls (Mohtashamipur *et al*., 1985). Additionally, ethylbenzene did not increase the frequency of micronucleated erythrocytes in peripheral blood from male and female $B6C3F_1$ mice treated for 13 weeks with ethylbenzene (NTP, 1999).

Midorikawa *et al* (2004) reported oxidative DNA damage induced by the metabolites of ethylbenzene, namely ethylhydroquinone and 4-ethylcatechol. Ethylbenzene was metabolized to 1-phenylethanol, acetophenone, 2-ethylphenol, and 4-ethylphenol by rat liver microsomes *in vitro*. 2-Ethylphenol and 4-ethylphenol were ring-dihydroxylated to ethylhydroquinone (EHQ) and 4-ethylcatechol (EC). These dihydroxylated metabolites induced DNA damage in ^{32}P-labeled DNA fragments from the human p53 tumor suppressor gene and induced the formation of 8-oxo-7, 8-dihydro-2'-deoxyguanosine in calf thymus DNA in the presence of Cu(II). Addition of exogenous NADH enhanced EC-induced oxidative DNA damage but had little effect on EHQ action. The authors suggest that Cu(I) and H_2O_2 produced via oxidation of EHQ and EC were involved in oxidative DNA damage. NADH enhancement was attributed to reactive species generated from the redox cycle of EC → 4-ethyl-1, 2-benzoquinone → EC. Similar effects of NADH were observed with benzene metabolites and catechol (Hirakawa *et al*. 2002).

***In vitro* and *in vivo* human studies**

Norppa and Vainio (1983) exposed human peripheral blood lymphocytes to ethylbenzene in the absence of metabolic activation. The authors reported that ethylbenzene induced a marginal increase in SCEs at the highest dose tested, and that the increase demonstrated a dose-response.

Holz *et al*. (1995) studied genotoxic effects in workers exposed to volatile aromatic hydrocarbons (styrene, benzene, ethylbenzene, toluene and xylenes) in a styrene production plant. Peripheral blood monocytes were assayed for DNA adducts using a nuclease P1-enhanced ^{32}P-postlabeling assay, and DNA single strand breaks, SCEs and micronuclei frequencies in peripheral blood lymphocytes were determined in workers and

controls. No significant increases in DNA adducts, DNA single strand breaks, SCEs or total micronuclei were noted in exposed workers. Significantly increased kinetochore-positive micronuclei (suggestive of aneuploidy-induction) were noted in total exposed workers, exposed smokers, and exposed non-smokers. However, the mixed exposures made it impossible to ascribe the kinetochore-positive micronuclei increase in exposed workers solely to ethylbenzene or other chemical exposure.

The effects of benzene and ethylbenzene exposure on chromosomal damage in exposed workers were examined by Sram *et al*. (2004). Peripheral blood lymphocytes from exposed workers and controls were analyzed for chromosomal aberrations. Exposure to ethylbenzene resulted in a significant increase in chromosomal aberrations. A reduction in ethylbenzene concentration due to improved workplace emissions controls resulted in a reduction in chromosomal damage in exposed workers. However, these workers were also exposed to benzene, making it impossible to determine if the chromosomal damage was due to ethylbenzene.

Ethylbenzene sunlight-irradiation products

Toda *et al*. (2003) found that sunlight irradiation of ethylbenzene resulted in the formation of ethylbenzene hydroperoxide (EBH). EBH induced oxidative DNA damage in the presence of Cu^{2+} as measured by the formation of 8-hydroxy-deoxyguanosine (8-OH-dG) adducts in calf thymus DNA. The Cu^{2+}-specific chelator bathocuproine strongly inhibited EBH-induced oxidative DNA damage. Superoxide dismutase (catalyzes superoxide decomposition) partly inhibited 8-OH-dG adduct formation, and catalase (catalyzes hydrogen peroxide decomposition) slightly inhibited 8-OH-dG adduct formation.

Summary of ethylbenzene genotoxicity

The above data indicate that ethylbenzene generally has not been demonstrated to induce gene mutations or chromosomal damage in bacteria, yeast or non-human mammalian cells, with the exception of positive results in the L5178Y mouse lymphoma cell mutation assay at concentrations producing significant cytotoxicity (McGregor *et al*., 1988; NTP, 1999). Data on the genotoxicity of ethylbenzene in humans is mixed (Norppa and Vainio, 1983; Holz *et al*., 1995; Sram *et al*., 2004), and interpretation of the epidemiological studies is made difficult because of confounding due to coexposures to other chemicals, including benzene. Ethylbenzene has been demonstrated to generate reactive oxygen species in liver microsomes from exposed rats (Serron *et al*., 2000), and ethylbenzene hydroperoxide (a sunlight-irradiation product) has been demonstrated to induce oxidative DNA damage in calf thymus DNA *in vitro* (Toda *et al*., 2003). The ethylbenzene metabolites EHQ and EC have demonstrated the ability to induce oxidative DNA damage in human DNA *in vitro* (Midorikawa *et al*., 2004).

Animal Cancer Bioassays

Maltoni *et al.* (originally reported in 1985; additional information published in 1997) studied the carcinogenicity of ethylbenzene in male and female Sprague-Dawley rats exposed via gavage. The authors reported an increase in the percentage of animals with malignant tumors associated with exposure to ethylbenzene. In animals exposed to 800 mg/kg bw ethylbenzene, Maltoni *et al.* (1997) reported an increase in nasal cavity tumors, type not specified (2% in exposed females versus 0% in controls), neuroesthesioepitheliomas (2% in exposed females versus 0% in controls; 6% in exposed males versus 0% in controls), and oral cavity tumors (6% in exposed females versus 2% in controls; 2% in exposed males versus 0% in controls). These studies were limited by inadequate reporting and were considered inconclusive by NTP (1999) and IARC (2000).

The National Toxicology Program (NTP, 1999; Chan *et al*., 1998) conducted inhalation cancer studies of ethylbenzene using male and female F344/N rats and $B6C3F_1$ mice. Groups of 50 animals were exposed via inhalation to 0, 75, 250 or 750 ppm ethylbenzene for 6.25 hours per day, 5 days per week for 104 (rats) or 103 (mice) weeks.

Survival probabilities were calculated by NTP (1999) using the Kaplan-Meier product-limit procedure. For male rats in the 75 ppm and 250 ppm exposure groups, survival probabilities at the end of the study were comparable to that of controls but significantly less for male rats in the 750 ppm exposure group (30% for controls and 28%, 26% and 4% for the 75 ppm, 250 ppm and 750 ppm exposure groups, respectively). NTP (1999) stated that the mean body weights of the two highest exposure groups (250 and 750 ppm) were "generally less than those of the chamber controls from week 20 until the end of the study." Expressed as percent of controls, the mean body weights for male rats ranged from 97 to 101% for the 75 ppm group, 90 to 98% for the 250 ppm group, and 81 to 98% for the 750 ppm group.

In female rats, survival probabilities were comparable in all groups (62% for controls and 62%, 68% and 72% for the 75 ppm, 250 ppm and 750 ppm exposure groups, respectively). NTP (1999) reported that the mean body weights of exposed female rats were "generally less than those of chamber controls during the second year of the study." Expressed as percent of controls, the mean body weights for female rats ranged from 92 to 99% for the 75 ppm group, 93 to 100% for the 250 ppm group, and 92 to 99% for the 750 ppm group.

The incidences of renal tumors (adenoma and carcinoma in males; adenoma only in females) were significantly increased among rats of both sexes in the high-dose group (males: 3/50, 5/50, 8/50, 21/50; females: 0/50, 0/50, 1/50, 8/49 in control, 75 ppm, 250 ppm and 750 ppm groups respectively [standard and extended evaluations of kidneys combined]). The incidence of testicular adenomas (interstitial and bilateral) was significantly elevated among high-dose male rats (36/50, 33/50, 40/50, 44/50 in control, 75 ppm, 250 ppm and 750 ppm groups respectively). NTP noted that this is a common neoplasm, which is likely to develop in all male F344/N rats that complete a natural life span; exposure to ethylbenzene "appeared to enhance its development." NTP concluded that there was clear evidence of carcinogenicity in male rats and some evidence in female rats, based on the renal tumorigenicity findings.

The survival probabilities at the end of the study for exposed male mice were comparable to that of controls (57% for controls and 72%, 64% and 61% for the 75 ppm, 250 ppm and 750 ppm exposure groups, respectively). The same was true for exposed female mice (survival probabilities at end of study: 71% for controls and 76%, 82% and 74% for the 75 ppm, 250 ppm and 750 ppm exposure groups, respectively). Mean body weights in exposed male mice were comparable to those of controls. NTP (1999) reported that the mean body weights in exposed female mice were greater in the 75 ppm group compared to controls after week 72, and generally lower in the 750 ppm group compared to controls from week 24 through week 68. Expressed as percent of controls, the ranges of mean body weights in exposed female mice were 96 to 110% in the 75 ppm group, 93 to 108% in the 250 ppm group, and 92 to 101% in the 750 ppm group.

Increased incidences of alveolar/bronchiolar adenoma and adenoma or carcinoma (combined) were observed in male mice in the high-dose group (7/50, 10/50, 15/50, 19/50 in control, 75 ppm, 250 ppm and 750 ppm groups respectively). Among female mice in the high-dose group, the incidences of combined hepatocellular adenoma or carcinoma and hepatocellular adenoma alone were significantly increased over control animals (for adenomas and carcinomas the tumor incidences were 13/50, 12/50, 15/50, 25/50 in control, 75 ppm, 250 ppm and 750 ppm groups, respectively). NTP (1999) concluded that these findings provided some evidence of carcinogenicity in male and female mice.

Human Studies of Carcinogenic Effects

Studies on the effects of workplace exposures to ethylbenzene have been complicated by concurrent exposures to other chemicals, such as xylenes and benzene. IARC (2000) concluded that there was inadequate evidence in humans for the carcinogenicity of ethylbenzene.

IV. DERIVATION OF CANCER POTENCY

Mechanism of Action and Basis for Cancer Potency

The derivation of a cancer potency value is based on either the demonstration of a mode of action (MOA) supporting a low dose linear dose-response **or** insufficient evidence supporting an alternative nonlinear low dose response leading to a NOAEL or margin of exposure for the observed tumor response. Thus, when no MOA can be convincingly established, a low dose linear dose-response is assumed by default in cancer risk assessment. The U.S. EPA (2005) has provided a detailed framework for evaluating the evidence supporting potential MOAs. In this analysis we evaluated data relevant to the MOA for ethylbenzene carcinogenicity .

Hard (2002) suggested that “chemically induced exacerbation of CPN [chronic progressive nephropathy] was the mode of action underlying the development of renal neoplasia” in the NTP ethylbenzene studies. In a retrospective evaluation of NTP chronic

studies, Seely *et al.* (2002) found that renal tubule cell neoplasms (RTCNs) "tend to occur in animals with a slightly higher severity of CPN than animals without RTCNs. However, the differential is minimal and clearly there are many male F344 rats with severe CPN without RTCNs." Seely *et al.* (2002) go on to say that "the data from these retrospective reviews suggest that an increased severity of CPN may contribute to the overall tumor response. However, any contribution appears to be marginal, and additional factors are likely involved."

Stott *et al.* (2003) reported accumulation of the male rat specific protein α2u-globulin in 1-week and 4-week inhalation studies of ethylbenzene in groups of six (1-week study) or eight (4-week study) male rats; the accumulation measured as an increase in hyaline droplets in proximal convoluted tubules was statistically significant only in the 1-week study. In the 13-week and 2-year inhalation studies of ethylbenzene, NTP (1992; 1999) found no evidence of an increase in hyaline droplets in treated rats. NTP (1999) therefore dismissed any involvement of α2u-globulin accumulation in renal tumor development in rats. The fact that the lesion appears in both male and female rats further argues against the involvement of α2u-globulin in the development of kidney toxicity. This mechanism was discounted by Hard (2002) as well. Stott *et al.* (2003) also postulated mechanisms of tumorigenic action involving cell proliferation and/or altered cell population dynamics in female mouse liver and male mouse lung. Stott et al. (2003) propose various hypothetical mechanisms which might involve nonlinear dose responses but the metabolism data clearly show the formation of epoxides and related oxidative metabolites, which could potentially be involved in a genotoxic mechanism of carcinogenic action possibly similar to benzene. Midorikawa *et al*. (2004) reported that the oxidative metabolism of ethylbenzene metabolites ethylhydroquinone and 4-ethylcatechol resulted in oxidative DNA damage *in vitro*. In view of the variety of metabolites and possible modes of action a low-dose linearity assumption is considered appropriate when extrapolating from the point of departure to obtain an estimate of the cancer risk at low doses with the BMD methodology as is use of the LMS approach.

Unit risk values for ethylbenzene were calculated based on data in male and female rats and mice from the studies of NTP (1999) utilizing both linearized multistage and benchmark dose methods. The incidence data used to calculate unit risk values are listed below in Tables 2 thru 6. The methodologies for calculating average concentration, lifetime weighted average (LTWA) dose and PBPK adjusted internal dose are discussed below. An internal dose metric representing the amount of ethylbenzene metabolized per kg body weight per day (metabolized dose) was used in the dose response analysis with published PBPK modeling parameters. In addition, for the mouse, recent pharmacokinetic data simulating mouse bioassay conditions were used to improve PBPK model predictions (Tables 5 and 6).

The metabolized dose metric is considered the most appropriate metric for assessment of carcinogenic risks when the parent compound undergoes systemic metabolism to a variety of oxidative metabolites which may participate in one or more mechanisms of carcinogenic action, and the parent compound is considered unlikely to be active. In this case the dose response relation is likely to be more closely related to the internal dose of

metabolites than of the parent compound. Other metrics commonly investigated using PBPK methods are the area under the concentration-time curve (AUC), and the maximum concentration (Cmax) for parent or metabolites in blood and target tissues. The PBPK metabolized dose metric was used in the ethylbenzene dose-response analysis.

Table 2. Incidence of renal tubule adenoma or carcinoma in male rats exposed to ethylbenzene via inhalation and relevant dose metrics (from NTP, 1999).

Chamber concentration (ppm)	Average concentration[a] (mg/m^3)	LTWA dose[b] (mg/kg-day)	PBPK metabolized dose[c] (mg/kg-d)	Tumor incidence[d]	Statistical significance[e]
0	0	0	0	3/42	$p < 0.001$[f]
75	60.7	35.6	21.15	5/42	$p = 0.356$
250	202	119	56.87	8/42	$p = 0.0972$
750	607	356	105.47	21/36	$p < 0.001$

a. Average concentration during exposure period calculated by multiplying chamber concentration by 6.25 hours/24 hours, 5 days/7 days, and 4.35 mg/m^3/ppm.
b. Lifetime weighted average doses determined by multiplying the lifetime average concentrations during the dosing period by the male rat breathing rate (0.264 m^3/day) divided by the male rat body weight (0.450 kg). The duration of exposure was 104 weeks, so no correction for less than lifetime exposure was required.
c. Rodent PBPK models were used to estimate internal doses under bioassay conditions; methods are described in detail below.
d. Effective rate. Animals that died before the first occurrence of tumor (day 572) were removed from the denominator.
e. The *p*-value listed next to dose groups is the result of pair wise comparison with controls using the Fisher exact test.
f. The *p*-value listed next to the control group is the result of trend tests conducted by NTP (1999) using the life table, logistic regression and Cochran-Armitage methods, with all methods producing the same result.

Table 3. Incidence of testicular adenoma in male rats exposed to ethylbenzene via inhalation and relevant dose metrics (from NTP, 1999).

Chamber concentration (ppm)	Average concentration[a] (mg/m^3)	LTWA dose[b] (mg/kg-day)	PBPK metabolized dose[c] (mg/kg-d)	Tumor incidence[d]	Statistical significance[e]
0	0	0	0	36/48	$p < 0.001$[f]
					$p = 0.010$[g]
75	60.7	35.6	21.15	33/46	p = 0.450N
250	202	119	56.87	40/49	p = 0.293
750	607	356	105.47	44/47	$p < 0.05$

a. Average concentration during exposure period calculated by multiplying chamber concentration by 6.25 hours/24 hours, 5 days/7 days, and 4.35 mg/m^3/ppm.
b. Lifetime weighted average doses determined by multiplying the lifetime average concentrations during the dosing period by the male rat breathing rate (0.264 m^3/day) divided by the male rat body weight (0.450 kg). The duration of exposure was 104 weeks, so no correction for less than lifetime exposure was required.
c. Rodent PBPK models were used to estimate internal doses under bioassay conditions; methods are described in detail below.
d. Effective rate. Animals that died before the first occurrence of tumor (day 420) were removed from the denominator.
e. The *p*-value listed next to dose groups is the result of pair wise comparison with controls using the Fisher exact test. An "N" after the *p*-value signifies that the incidence in the dose group is lower than that in the control group. The *p*-values listed next to the control group are the result of trend tests conducted by NTP (1999) using the methods specified in the following footnotes.
f. Results of trend tests conducted by NTP (1999) using the life table and logistic regression tests.
g. Result of Cochran-Armitage trend test conducted by NTP (1999).

Table 4. Incidence of renal tubule adenoma in female rats exposed to ethylbenzene via inhalation and relevant dose metrics (from NTP, 1999).

Chamber concentration (ppm)	Average concentration[a] (mg/m^3)	LTWA dose[b] (mg/kg-day)	PBPK metabolized dose[c] (mg/kg-d)	Tumor incidence[d]	Statistical significance[e]
0	0	0	0	0/32	$p < 0.001$[f]
75	60.7	41.6	24.22	0/35	--
250	202	139	63.72	1/34	$p = 0.515$
750	607	416	115.3	8/37	$p < 0.01$

a. Average concentration during exposure period calculated by multiplying chamber concentration by 6.25 hours/24 hours, 5 days/7 days, and 4.35 mg/m3/ppm.
b. Lifetime weighted average doses were determined by multiplying the lifetime average concentrations during the dosing period by the female rat-breathing rate (0.193 m3/day) divided by the female rat body weight (0.282 kg). The duration of exposure was 104 weeks, so no correction for less than lifetime exposure was required.
c. Rodent PBPK models were used to estimate internal doses under bioassay conditions; methods are described in detail below.
d. Effective rate. Animals that died before the first occurrence of tumor (day 722) were removed from the denominator.
e. The p-value listed next to dose groups is the result of pair wise comparison with controls using the Fisher exact test.
f. The p-value listed next to the control group is the result of trend tests conducted by NTP (1999) using the life table, logistic regression and Cochran-Armitage methods, with all methods producing the same result.

Table 5. Incidence of lung alveolar/bronchiolar carcinoma or adenoma in male mice exposed to ethylbenzene via inhalation and relevant dose metrics (from NTP, 1999).

Chamber concentra-tion (ppm)	Average concentra-tion[a] (mg/m^3)	LTWA dose[b] (mg/kg-day)	PBPK metabolized dose[c] (mg/kg-d)	PBPK metabolized dose - Charest-Tardif[d] (mg/kg-d)	Tumor incidence[e]	Statistical significance[f]
0	0	0	0	0	7/46	p = 0.004[g]
75	60.7	69.3	40.40	46.60	10/48	p = 0.331
250	202	231	89.38	152.8	15/50	p = 0.0688
750	607	693	134.77	340.2	19/48	p < 0.01

a. Average concentration during exposure period calculated by multiplying chamber concentration by 6.25 hours/24 hours, 5 days/7 days, and 4.35 mg/m^3/ppm.
b. Lifetime weighted average doses were determined by multiplying the average concentrations during the dosing period by the male mouse breathing rate (0.0494 m^3/day) divided by the male mouse body weight (0.0429 kg) and by 103 weeks/104 weeks to correct for less than lifetime exposure.
c. Rodent PBPK models were used to estimate internal doses under bioassay conditions; methods are described in detail below.
d. PBPK metabolized dose based on published parameters from Charest-Tardif *et al*. (2006).
e. Effective rate. Animals that died before the first occurrence of tumor (day 418) were removed from the denominator.
f. The *p*-value listed next to dose groups is the result of pair wise comparison with controls using the Fisher exact test.
g. The *p*-value listed next to the control group is the result of trend tests conducted by NTP (1999) using the life table, logistic regression and Cochran-Armitage methods, with all methods producing the same result.

Table 6. Incidence of liver hepatocellular carcinoma or adenoma in female mice exposed to ethylbenzene via inhalation and relevant dose metrics (from NTP, 1999).

Chamber concentration (ppm)	Average concentration[a] (mg/m^3)	LTWA dose[b] (mg/kg-day)	PBPK metabolized dose[c] (mg/kg-d)	PBPK metabolized dose - Charest-Tardif[d] (mg/kg-d)	Tumor incidence[e]	Statistical significance[f]
0	0	0	0	0	13/47	p = 0.004[g] p = 0.002[h]
75	60.7	71.6	41.53	47.98	12/48	p = 0.479N
250	202	239	91.22	157.3	15/47	p = 0.411
750	607	716	136.68	348.1	25/48	p < 0.05

a. Average concentration during exposure period calculated by multiplying chamber concentration by 6.25 hours/24 hours, 5 days/7 days, and 4.35 mg/m^3/ppm.
b. Lifetime weighted average doses were determined by multiplying the average concentrations during the dosing period by the female mouse breathing rate (0.0463 m^3/day) divided by the female mouse body weight (0.0389 kg) and by 103 weeks/104 weeks to correct for less than lifetime exposure.
c. Rodent PBPK models were used to estimate internal doses under bioassay conditions; methods are described in detail below.
d. PBPK metabolized dose based on published parameters from Charest-Tardif *et al*. (2006).
e. Effective rate. Animals that died before the first occurrence of tumor (day 562) were removed from the denominator.
f. The *p*-value listed next to dose groups is the result of pair wise comparison with controls using the Fisher exact test. An "N" after the *p*-value signifies that the incidence in the dose group is lower than that in the control group. The *p*-value listed next to the control group is the result of trend tests conducted by NTP (1999) using the methods specified in the footnotes.
g. Result of trend test conducted by NTP (1999) using the life table method.
h. Results of trend tests conducted by NTP (1999) using the logistic regression and Cochran-Armitage trend tests.

Linearized Multistage Approach

The default approach, as originally delineated by CDHS (1985), is based on a linearized form of the multistage model of carcinogenesis (Armitage and Doll, 1954). Cancer potency is estimated from the upper 95% confidence limit, q_1^*, on the linear coefficient q_1 in a model relating lifetime probability of cancer (*p*) to dose (d):

$$p = 1 - \exp[-(q_0 + q_1 d + q_2 d^2 + \cdots + q_j d^j)] \quad (1)$$

with constraints, $q_i \geq 0$ for all i. The default number of parameters used in the model is n, where n is the number of dose groups in the experiment, with a corresponding polynomial degree of n-1.

The parameter q_1^* is estimated by fitting the above model to dose response data using MSTAGE (Crouch, 1992). For a given chemical, the model is fit to one or more data sets. The default approach is to select the data for the most sensitive species and sex.

To estimate animal potency, q_{animal}, when the experimental exposure is less than lifetime the parameter q_1* is adjusted by assuming that the lifetime incidence of cancer increases with the third power of age. The durations of the NTP experiments were at least as long as the standard assumed lifetime for rodents of 104 weeks, so no correction for short duration was required.

Benchmark Dose Methodology

U.S. EPA (2003) and others (*e.g.* Gaylor *et al.*, 1994) have more recently advocated a benchmark dose method for estimating cancer risk. This involves fitting a mathematical model to the dose-response data. A linear or multistage procedure is often used, although others may be chosen in particular cases, especially where mechanistic information is available which indicates that some other type of dose-response relationship is expected, or where another mathematical model form provides a better fit to the data. A point of departure on the fitted curve is defined: for animal carcinogenesis bioassays this is usually chosen as the lower 95% confidence limit on the dose predicted to cause a 10% increase in tumor incidence (LED_{10}). Linear extrapolation from the point of departure to zero dose is used to estimate risk at low doses either when mutagenicity or other data imply that this is appropriate, or in the default case where no data on mechanism are available. The slope factor thus determined from the experimental data is corrected for experimental duration in the same way as the q_1^* adjustments described for the linearized multistage procedure. In the exceptional cases where data suggesting that some other form of low-dose extrapolation is appropriate, a reference dose method with uncertainty factors as required may be used instead.

The quantal tumor incidence data sets were analyzed using the BMDS software (version 1.3.2) of U.S.EPA (2000). In general the program models were fit to the data with the X^2 fit criterion ≥ 0.1. In those cases when more than one model gave adequate fit the model that gave the best fit in the low dose region (visually and by X^2 residual) was chosen for the LED_{10} estimation.

Implementation of LMS and BMD Methodology

The linearized multistage approach and the benchmark dose methodology were both applied to the tumor incidence data for ethylbenzene in the NTP (1999) studies.

Calculation of Lifetime Weighted Average Dose

Male and female rats (NTP, 1999) were exposed to ethylbenzene for 6.25 hours/day, five days/week for 104 weeks. Male and female mice (NTP, 1999) were exposed to ethylbenzene for 6.25 hours/day, five days/week for 103 weeks. Average concentrations,

expressed in mg/m^3, during the exposure period were calculated by multiplying the reported chamber concentrations by 6.25 hours/24 hours, five days/seven days and 4.35 mg/m^3/ppm.

The average body weights of male and female rats were calculated to be 0.450 kg and 0.282 kg, respectively, based on data for controls reported by NTP (1999). The average body weights of male and female mice were estimated to be approximately 0.0429 kg and 0.0389 kg, respectively, based on data for controls reported by NTP (1999). Inhalation rates (I) in m^3/day for rats and mice were calculated based on Anderson *et al.* (1983):

$$I_{rats} = 0.105 \times (bw_{rats}/0.113)^{2/3} \quad (3)$$

$$I_{mice} = 0.0345 \times (bw_{mice}/0.025)^{2/3} \quad (4)$$

Breathing rates were calculated to be 0.264 m^3/day for male rats, 0.193 m^3/day for female rats, 0.0494 m^3/day for male mice, and 0.0463 m^3/day for female mice. Lifetime weighted average (LTWA) doses were determined by multiplying the average concentrations during the dosing period by the appropriate animal breathing rate divided by the corresponding animal body weight. For mice, the exposure period (103 weeks) was less than the standard rodent lifespan (104 weeks), so an additional factor of 103 weeks/104 weeks was applied to determine lifetime average doses.

Physiologically Based Pharmacokinetic (PBPK) Modeling

The carcinogenic potency of ethylbenzene was calculated using rodent PBPK models to estimate internal doses under bioassay conditions. Extrapolations to human potencies were done using interspecies scaling. For comparison, a human PBPK model was used to estimate risk-specific doses for occupational and ambient environmental exposure scenarios. The PBPK models were comprised of compartments for liver, fat, vessel poor tissues (e.g., muscle), vessel rich tissues, and lung. Typical model parameters are given in Table 7 for flow-limited PBPK models and a model diagram is shown in Figure 2. Chemical and metabolic parameters were taken from Haddad *et al.* (2001) for all species studied and additionally from Sams *et al.* (2004) for human metabolism. Simulations were conducted using Berkeley Madonna (v.8.0.1) software (e.g., 6.25 hr exposure/day x 5 days/wk for one week simulations of bioassay exposure levels, see sample model equations in the appendix). The chemical partition coefficients used in the model were the same for all species: blood:air, 28.0; fat:blood, 55.57; liver:blood, 2.99; muscle:blood, 0.93; and lung:blood, 2.15 (Haddad *et al.*, 2001). The metabolic parameters were also from Haddad *et al.* (2001): VmaxC = 6.39 mg/hr/kg body weight scaled to the ¾ power of body weight; Km = 1.04 mg/L for all species. A second set of human metabolic parameters from Sams *et al.* (2004) was also used. In this case constants for low and high affinity saturable pathways were incorporated into the models: high affinity Vmax = 689 pmol/min/mg microsomal protein, Km = 8.0 μM; low affinity Vmax = 3039 pmol/min/mg protein, Km = 391 μM. A value of 28 mg/mL liver for microsomal protein concentration was assumed. Published values we reviewed ranged from 11 to 35 mg/g tissue. The value we used was similar to that of Kohn and Melnick (2000) (30 mg/g

liver) and Medinsky *et al*. (1994) (35 mg/g liver). All model units were converted to moles, liters, or hours for simulation. A molecular weight of 106.16 g/mol for ethylbenzene was used throughout. In addition to PBPK modeling based on published parameters the recent pharmacokinetic data of Charest-Tardif *et al*. (2006) was used in the mouse PBPK modeling for comparison purposes.

Johansen and Filser (1992) studied a series of volatile organic chemicals including ethylbenzene and developed theoretical values for clearance of uptake (CLupt) defined as the product of the rate constant for transfer of chemical from air to body and the volume of air in a closed chamber. The CLupt values were based on alveolar ventilation (Qalv), cardiac output (Qtot), and blood:air partition coefficients (Pbi). For most chemicals the experimentally determined values for inhalation uptake in rats and mice were about 60% of the theoretical values. The values determined for ethylbenzene in the rat of 70 mL/min for CLupt and 73 mL/min for alveolar ventilation are about 50% of the value given in Table 7 (i.e., 4.38 L/hr vs. 8.58 L/hr). In the work described below selected simulations were run with lower alveolar ventilation rates for comparison with the main analysis.

The primary model prediction was the amount of ethylbenzene metabolized over the course of the simulation. The AUCs, the areas under the concentration x time curves for mixed venous concentration and liver concentration of ethylbenzene, were also recorded. The values for one week simulations of the amount metabolized (mmoles) were divided by 7d/week and body weight in kg to give daily values and multiplied by the molecular weight to give the PBPK metabolized dose in mg/kg-d. These values were then used in the dose response assessment of individual tumor site incidences using the benchmark dose software of U.S. EPA (BMDS v. 1.3.2) to obtain the dose at which tumor incidence was predicted to be 10% (ED_{10}), LED_{10} (lower 95% confidence limit of ED_{10}) and curve fit statistics for each experiment.

Table 7. Parameters for Ethylbenzene PBPK Models.

Parameter	Mouse	Rat	Human
Alveolar ventilation rate Qalv, L/hr	$15*BW^{0.7}$	$15*BW^{0.7}$	$36*BW^{0.7}$ occ $15*BW^{0.7}$ env
Cardiac output Qtot, L/hr	$15*BW^{0.7}$	$15*BW^{0.7}$	$18*BW^{0.7}$ occ $15*BW^{0.7}$ env
Blood flows (fraction of cardiac output)			
Fat, Qf	0.09	0.09	0.05
Liver, Ql	0.25	0.25	0.26
Muscle, Qm	0.15	0.15	0.25
Vessel Rich Group, Qvrg	0.51	0.51	0.44
Tissue volumes, L (fraction of body weight)			
Fat, Vf	0.06	0.09	0.20, 0.40
Liver, Vl	0.04	0.049	0.026
Muscle, Vm	0.76	0.72	0.61, 0.41
Vessel Rich Group, Vvrg	0.05	0.036	0.036
Lung, Vlu	0.014	0.014	0.014
Body weight, BW kg	0.043 male 0.039 female	0.45 male 0.28 female	70
Metabolism VmaxC (Haddad *et al*., 2001) $mg/hr/kg^{3/4}$ BW	6.39 25.56*	6.39	6.39
Km mg/L (Haddad *et al*. 2001)	1.04	1.04	1.04
Metabolism (Sams *et al*. 2004) High/Low Affinity Vmax $mg/hr/L_{liver}$ High/Low Affinity Km mg/L			 122.8/542.0 0.85/40.4

Note: occ = occupational scenario values; env = environmental exposure scenario; * this value provided better fit to the data of Charest-Tardif *et al*. (2006).

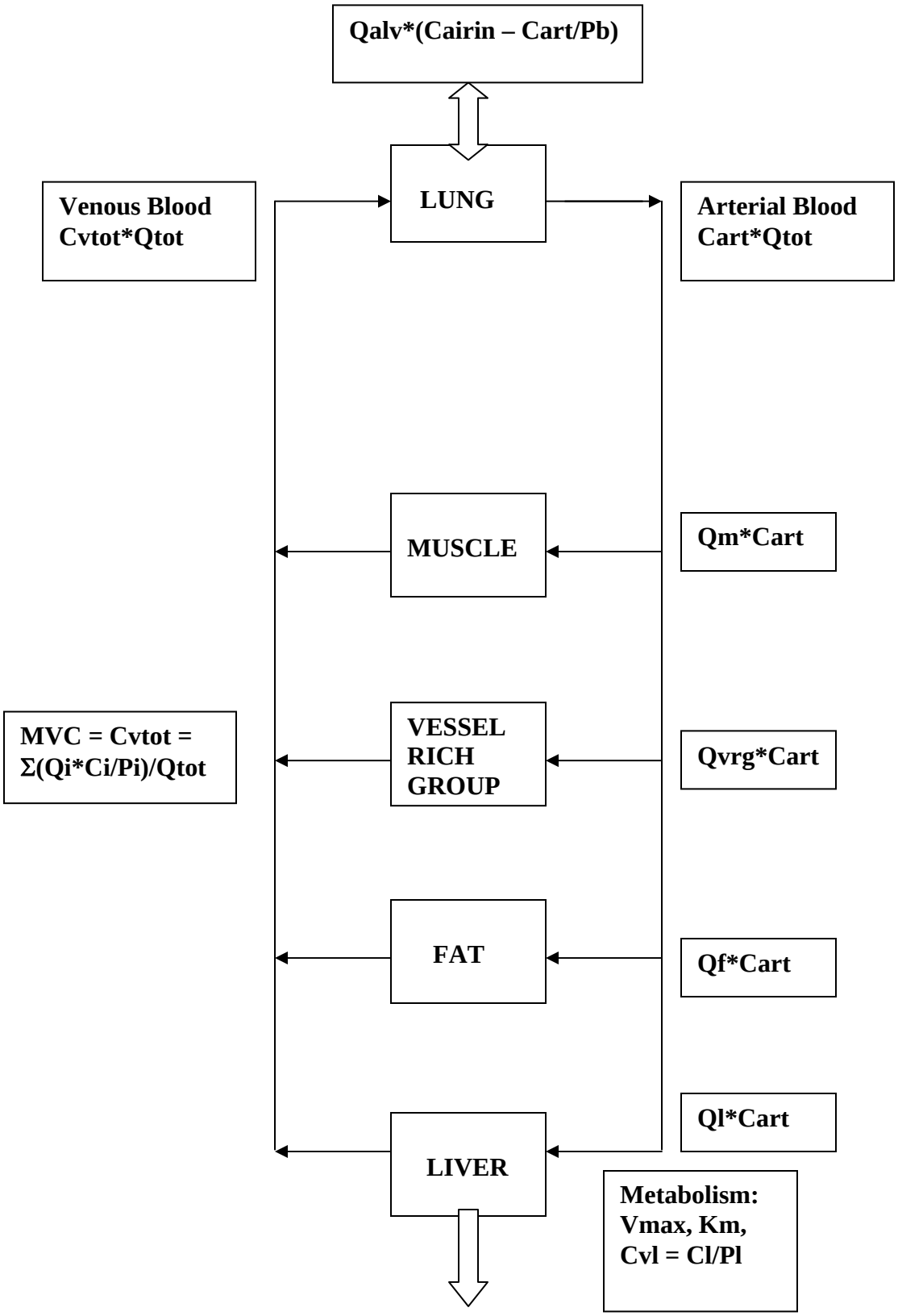

Figure 2. General Scheme for Ethylbenzene PBPK Model: Qtot = Cardiac Output; Qalv = Alveolar Ventilation Rate ; Pb = Blood/Air Partition Coefficient; Pi = Tissue/Blood Partition Coefficients; Qi = Tissue Fractional Blood Flows ;Cart = Arterial Blood Concentration; Cvtot = Mixed Venous Blood Concentration; Cairin = Inhaled Concentration (e.g. ppm Ethylbenzene); Cexhaled = Cart/Pb(Concentration of Ethylbenzene Exhaled); Ci = Ai/Vi = Mass/Volume.

Internal to External Dose Conversion

In order to estimate external equivalent air concentrations associated with internal doses, the PBPK models were used. Simulation of 10 ppb ethylbenzene for 8 hours in the human PBPK model with the Haddad *et al*. (2001) parameters resulted in the predicted uptake of 3.04 µmoles in tissues and blood compared to 3.96 µmoles inhaled, or an uptake of 77%. Practically all of the 3.04 µmoles represents metabolized ethylbenzene. Based on these results, OEHHA assumed that all absorbed ethylbenzene is metabolized at low dose. Thus, for the inhalation route, the internal metabolized dose is converted to an external dose by applying an uptake factor of 77%. As noted above, uptake values of 49 to 65% have been observed in studies with human subjects exposed via inhalation to ethylbenzene. OEHHA has occasionally used a default value of 50% for inhalation uptake of similar volatile organic compounds.

For the oral route at low dose, OEHHA assumed that ethylbenzene is 100% metabolized (based on the model predictions noted above) and that uptake of ethylbenzene is also 100% (a conventional assumption made for lack of more specific data at low doses in humans). Thus, at low dose, the internal metabolized dose of ethylbenzene would be equivalent to an external applied dose by the oral route. No conversion factor for internal to external dose is necessary in this case.

Interspecies Extrapolation

Interspecies extrapolation from experimental animals to humans is normally based on the following relationship, where bw_h and bw_a are human and animal body weights, respectively, and potency (*e.g.*, q_{animal}) is expressed on a per dose per body weight basis (e.g., $(mg/kg\text{-}d)^{-1}$ see Watanabe *et al*. (1992):

$$q_{human} = q_{animal} \times \left(\frac{bw_h}{bw_a}\right)^{1/4} \qquad (2)$$

Alternatively, when performing calculations based on applied dose in terms of air concentrations, the assumption has sometimes been made that air concentration values are equivalent between species (CDHS, 1985). However, using the interspecies scaling factor shown above is preferred because it is assumed to account not only for pharmacokinetic differences (*e.g.*, breathing rate, metabolism), but also for pharmacodynamic considerations.

When extrapolating from an animal potency in terms of PBPK adjusted internal dose, only a pharmacodynamic scaling factor is required. Since an equal contribution of pharmacokinetic and pharmacodynamic considerations is assumed, animal potency values already adjusted for pharmacokinetic considerations require a scaling factor of only $(bw_h/bw_a)^{1/8}$:

$$q_{human} = q_{animal} \times \left(\frac{bw_h}{bw_a}\right)^{1/8} \qquad (3)$$

Derivation of the Human Inhalation Unit Risk Value

To derive the human inhalation unit risk value, the human internal potency value based on PBPK metabolized dose is multiplied by the human breathing rate (assumed to be 20 m^3/day), divided by the human body weight (assumed to be 70 kg) and multiplied by the estimated inhalation uptake factor in humans (0.77 for ethylbenzene). This yields a human inhalation unit risk value in terms of external air concentration.

For the case of LTWA doses, the human inhalation unit risk value is derived by multiplying the human inhalation cancer potency value by the human breathing rate (assumed to be 20 m^3/day), divided by the human body weight (assumed to be 70 kg). Because the LTWA doses represent external applied dose from an inhalation study, no uptake factor is necessary in deriving the unit risk value.

Inhalation and Oral Cancer Potency Values

The cancer potency derived based on internal doses (i.e., PBPK metabolized dose) is equivalent to the oral cancer potency, because of the assumption of 100% oral uptake and 100% metabolism of ethylbenzene at low doses. To derive the inhalation cancer potency, the human inhalation unit risk value is multiplied by the human body weight (assumed to be 70 kg) and divided by the human breathing rate (assumed to be 20 m^3/day).

For the case of LTWA doses, the human cancer potency derived based on these external applied doses from the inhalation study is equivalent to the inhalation cancer potency. To determine the oral cancer potency, the inhalation cancer potency is multiplied by the ratio of the oral to inhalation uptake factors (i.e., 1/0.77).

Example Calculations – BMD Approach

In this section, example calculations of the human cancer potency values (oral and inhalation) and the human unit risk value based on the LED_{10} for the male rat kidney tumor data and either the PBPK metabolized doses or the LTWA doses are provided. The same logic would apply to the derivation using the LMS methodology, with the only difference being that the animal potency is taken directly from the MSTAGE program under the LMS approach instead of being calculated from the LED_{10} in the BMD approach. To distinguish the results obtained under the two approaches, the terms P_{animal}, P_{human}, and U_{human} were used for the values derived using the BMD methodology.

Calculations based on BMD methodology and PBPK metabolized doses

Under the BMD methodology, the ED_{10}s and LED_{10}s are obtained from the BMDS program, with the animal potency value being simply $0.1/LED_{10}$ (i.e., 10% risk (0.1) divided by the 95% lower confidence limit on the dose that induced 10% risk or LED_{10}; this is the definition of a slope). To obtain the animal potency based on internal dose

($P_{animal_internal}$), 0.1 is divided by the LED_{10} derived for the male rat kidney tumor data and the PBPK metabolized doses:

$$P_{animal_internal} = 0.1/LED_{10} = 0.1/22.96 = 0.004355\ (mg/kg\text{-}d)^{-1}$$

The human potency value based on internal dose ($P_{human_internal}$) is calculated from the animal potency as follows:

$$\begin{aligned} P_{human_internal} &= 0.004355\ (mg/kg\text{-}day)^{-1} \times (70\ kg/0.450\ kg)^{1/8} \\ &= 0.0082\ (mg/kg\text{-}day)^{-1} \end{aligned}$$

$P_{human_internal}$ is equivalent to the oral human potency, because of the assumptions of 100% oral uptake and 100% metabolism of ethylbenzene at low dose.

The human unit risk value (U_{human}) is derived from the internal human cancer potency as follows:

$$\begin{aligned} U_{human} &= 0.0082\ (mg/kg\text{-}day)^{-1} \times (20\ m^3/day/70\ kg) \times 0.77 \\ &= 1.8 \times 10^{-3}\ (mg/m^3)^{-1} \\ &= 1.8 \times 10^{-6}\ (\mu g/m^3)^{-1} \end{aligned}$$

As noted above the value of 0.77 for the proportion of inhaled dose metabolized was based on the prediction of the human ethylbenzene PBPK model, assuming exposure to low levels of ethylbenzene, and is similar to values obtained in studies with human subjects (Bardodej and Bardodejova, 1970; Engstrom et al., 1984; Gromiec and Piotrowski,1984). By applying this uptake factor and assuming that the metabolism of ethylbenzene is 100% at low dose, the resulting unit risk value is expressed in terms of external concentration.

The inhalation cancer potency is derived from the unit risk value as follows:

$$\begin{aligned} P_{human_inhalation} &= 1.8 \times 10^{-3}\ (mg/m^3)^{-1} \times (70\ kg/20\ m^3/day) \\ &= 0.0063\ (mg/kg\text{-}day)^{-1} \end{aligned}$$

<u>Calculations based on BMD methodology and LTWA doses</u>

The LED_{10} based on the male rat kidney data (Table 4) and the LTWA doses (Table 3) is determined using the BMDS software. The animal potency, which in this case is the inhalation animal potency (P_{animal_inh}), is determined by dividing the LED_{10} into 0.1:

$$P_{animal_inh} = 0.1/LED_{10} = 0.1/42.62 = 0.002346\ (mg/kg\text{-}d)^{-1}$$

The human inhalation cancer potency (P_{human_inh}) is derived from the animal potency using the interspecies scaling factor:

$$P_{human_inh} = 0.002346\ (mg/kg\text{-}day)^{-1} \times (70\ kg/0.450\ kg)^{1/4}$$

$= 0.0083\ (mg/kg\text{-}day)^{-1}$

The unit risk factor is derived from the human inhalation cancer potency as follows:

$$U_{human} = 0.0083\ (mg/kg\text{-}day)^{-1} \times (20\ m^3/day/70\ kg)$$
$$= 2.4 \times 10^{-3}\ (mg/m^3)^{-1}$$
$$= 2.4 \times 10^{-6}\ (\mu g/m^3)^{-1}$$

For the calculation based on LTWA doses, the oral cancer potency is derived from the inhalation cancer potency by multiplying by the ratio of uptake factors (1/0.77):

$$P_{human_oral} = 0.0083\ (mg/kg\text{-}day)^{-1} \times (1/0.77)$$
$$= 0.011\ (mg/kg\text{-}day)^{-1}$$

Results and Discussion

Linearized multistage approach

Tables 8a and 8c list the q_{animal}, q_{human} and unit risk values based on the linearized multistage approach. The cancer potencies and unit risk values were derived using the applied LTWA doses and PBPK adjusted internal doses, as described above. The most sensitive tumor sites are the male rat testicular interstitial cell adenoma and the male rat kidney adenoma and carcinoma, when the LTWA doses are used. If PBPK doses are used, the most sensitive sites are the male rat testicular interstitial cell adenoma and the male mouse lung. Regardless of whether LTWA or PBPK doses are used, the results based on the male mouse lung tumor data, the female mouse liver tumor data, and the male rat renal tumor data are comparable, producing unit risk values of approximately 0.002 $(mg/m^3)^{-1}$. Further, the results using either the LTWA doses or the PBPK metabolized doses are quite similar indicating that the PBPK modeling does not markedly improve the estimates. Some of the inherent uncertainty associated with PBPK modeling is demonstrated by the fact that the results based on the PBPK modeling using the Charest-Tardif parameters differ by roughly a factor of two for the mice compared to the results derived based on the other equally valid PBPK modeling approach.

The testicular interstitial cell adenoma site gives the highest values. However, the very high background incidences of this tumor make it less reliable and suitable for dose-response analysis than the male rat kidney site.

Thus, the unit risk value of 0.0025 $(mg/m^3)^{-1}$ derived based on the LMS approach from the male rat kidney tumor data using the LTWA doses is selected as the representative value for ethylbenzene. It is very similar to the estimate derived using the PBPK approach (0.0026 $(mg/m^3)^{-1}$), and does not require the many assumptions made in applying the more complex PBPK approach.

Table 8a. Cancer potency and unit risk values for ethylbenzene derived using the linearized multistage procedure (LMS) with applied LTWA doses based on data from NTP (1999).

Sex, species	Site, tumor type	q_{animal_inh} (mg/kg-day)$^{-1}$	q_{human_inh}[a] (mg/kg-day)$^{-1}$	Human unit risk value[b] (mg/m^3)$^{-1}$	Goodness-of-fit test[c]
Male rats	Renal tubule carcinoma or adenoma	0.002472	0.0087	0.0025	p = 0.81
	Testicular interstitial cell adenoma	0.006547	0.023	0.0066	p = 0.52
Female rats	Renal tubule adenoma	0.0005528	0.0022	0.00063	p = 0.95
Male mice	Lung alveolar/ bronchiolar carcinoma or adenoma	0.0008494	0.0054	0.0015	p = 0.75
Female mice	Liver hepatocellular carcinoma or adenoma	0.0009421	0.0061	0.0017	p = 0.68

a. The interspecies extrapolation was applied to q_{animal_inh} in (mg/kg-d)$^{-1}$ to determine q_{human_inh} (mg/kg-day)$^{-1}$, as described above.

b Unit risk was determined by multiplying the human cancer potency in (mg/kg-day)$^{-1}$ by the human breathing rate (20 m^3/day) divided by human body weight (70 kg), as described above.

c. A *p*-value of greater than 0.05 for the chi-square goodness-of-fit test indicates an adequate fit.

Table 8b. Cancer potency and unit risk values for ethylbenzene derived using the BMD procedure with applied LTWA doses based on data from NTP (1999).

Sex, species	Site, tumor type	P_{animal_inh} (mg/kg-day)$^{-1}$	P_{human_inh}[a] (mg/kg-day)$^{-1}$	Human unit risk value[b] (mg/m^3)$^{-1}$	Model Goodness-of-fit test[c]
Male rats	Renal tubule carcinoma or adenoma	0.002589	0.0091	0.0026	Quantal Linear p = 0.49
	Testicular interstitial cell adenoma	0.006333	0.022	0.0063	Quantal Linear p = 0.73
Female rats	Renal tubule adenoma	0.0004704	0.0019	0.00054	Quantal Quadratic p = 0.99
Male mice	Lung alveolar/ bronchiolar carcinoma or adenoma	0.0008062	0.0051	0.0015	Quantal Linear p = 0.75
Female mice	Liver hepatocellular carcinoma or adenoma	0.0009256	0.0060	0.0017	Quantal Linear p = 0.74

a. The interspecies extrapolation of $(BW_h/BW_a)^{1/4}$ was applied to P_{animal_inh} in (mg/kg-d)$^{-1}$ to determine P_{human_inh} (mg/kg-day)$^{-1}$, as described above.

b Unit risk was determined by multiplying the human cancer potency in (mg/kg-day)$^{-1}$ by the human breathing rate (20 m^3/day) divided by human body weight (70 kg).

c. A *p*-value ≥ 0.1 for the chi-square goodness-of-fit test indicates an adequate fit with the BMD procedure.

Table 8c. Cancer potency and unit risk values for ethylbenzene derived using the linearized multistage procedure with PBPK metabolized doses and bioassay data from NTP (1999).

Sex, species	Site, tumor type	$q_{animal_internal}$ (mg/kg-day)$^{-1}$	$q_{human_internal}$[a] (mg/kg-day)$^{-1}$	Human unit risk value[b] (mg/m^3)$^{-1}$	Goodness-of-fit test[c]
Male rats	Renal tubule carcinoma or adenoma	0.004465	0.0084	0.0018	p = 0.57
	Testicular interstitial cell adenoma	0.01586	0.030	0.0066	p = 0.62
Female rats	Renal tubule adenoma	0.0009037	0.0018	0.00040	p = 0.98
Male mice	Lung alveolar/ bronchiolar carcinoma or adenoma	0.003747 0.001680[d]	0.0094 0.0042[d]	0.0021 0.00092[d]	p = 0.99 p = 0.93[d]
Female mice	Liver hepatocellular carcinoma or adenoma	0.002702 0.001705[d]	0.0069 0.0044[d]	0.0015 0.00097[d]	p = 0.86 p = 0.73[d]

a. The interspecies extrapolation of $(bw_h/bw_a)^{1/8}$ was applied to $q_{animal_internal}$ in (mg/kg-d)$^{-1}$ to determine $q_{human_internal}$ in (mg/kg-day)$^{-1}$, as described above.
b. Unit risk was determined by multiplying the human internal cancer potency in (mg/kg-day)$^{-1}$ by the human breathing rate (20 m^3/day) divided by human body weight (70 kg) and by an uptake factor of 0.77, as described above.
c. A *p*-value of greater than 0.05 for the chi-square goodness-of-fit test indicates an adequate fit.
d. These values obtained with PBPK model adjusted to approximate the PK data of Charest-Tardif *et al.* (2006).

Table 8d. Cancer potency and unit risk values for ethylbenzene derived using the BMD procedure with PBPK metabolized doses and bioassay data from NTP (1999).

Sex, species	Site, tumor type	$P_{animal_internal}$ (mg/kg-day)$^{-1}$	$P_{human_internal}$[a] (mg/kg-day)$^{-1}$	Human unit risk value[b] (mg/m^3)$^{-1}$	Model Goodness-of-fit test[c]
Male rats	Renal tubule carcinoma or adenoma	0.004355	0.0082	0.0018	Multistage (order = 3) p = 0.57
	Testicular interstitial cell adenoma	0.004570	0.0086	0.0019	Quantal Quadratic p = 0.87
Female rats	Renal tubule adenoma	0.001443	0.0029	0.00064	Multistage (order = 3) p = 0.98
Male mice	Lung alveolar/ bronchiolar carcinoma or adenoma	0.003557	0.0090	0.0020	Multistage (order = 3) p = 0.99
		0.001595[d]	0.0040[d]	0.00088[d]	Quantal Linear p = 0.93
Female mice	Liver hepatocellular carcinoma or adenoma	0.002604	0.0066	0.0015	Multistage (order = 3) p = 0.86
		0.0007523[d]	0.0019[d]	0.00042[d]	Quantal Quadratic p = 0.94[d]

a. The interspecies extrapolation of $(BWh/BWa)^{1/8}$ was applied to $P_{animal_intneral}$ in (mg/kg-d)$^{-1}$ to determine $P_{human_internal}$ (mg/kg-day)$^{-1}$, as described above.
b. Unit risk was determined by multiplying the human internal cancer potency in (mg/kg-day)$^{-1}$ by the human breathing rate (20 m^3/day) divided by human body weight (70 kg) and by an uptake factor of 0.77, as described above.
c. A *p*-value of 0.1 or greater for the chi-square goodness-of-fit test indicates an adequate fit with the BMD procedure.
d. These values obtained with PBPK model adjusted to approximate the mouse pharmacokinetic data of Charest-Tardif *et al*. (2006).

Benchmark dose approach

Tables 8b and 8d list the P_{animal}, P_{human}, and human unit risk values based on the BMD approach. The cancer potencies and unit risk values were derived using the applied LTWA doses and PBPK adjusted internal doses, as described above. As expected the results from the BMD approach are quite similar to those just described using the LMS approach. Unit risk values ranged from 0.00042 to 0.0063 $(mg/m^3)^{-1}$. When LTWA doses are used, the most sensitive sites are the male rat testicular interstitial cell adenoma and the male rat kidney adenoma and carcinoma. When PBPK doses are used, the most sensitive sites are the male rat testicular interstitial cell adenomas and the male mice lung tumors. Regardless of whether LTWA or PBPK doses are used, the unit risk values based on male rat kidney, male mouse lung, and female mouse liver are comparable at approximately 0.002 $(mg/m^3)^{-1}$ The results based on the Charest-Tardif PBPK parameters are about a factor of two to four less than those based on the PBPK parameters from Haddad, again indicating some of the uncertainty in the PBPK approach.

As discussed above, the male rat testicular tumors are not considered appropriate for unit risk and potency estimation because of the high background rate. The preferred unit risk value of 0.0025 $(mg/m^3)^{-1}$, is derived from the male rat kidney data based on LTWA doses with the LMS method. The value derived using the BMD approach based on LTWA doses is not significantly different (0.0026 $(mg/m^3)^{-1}$).

Human PBPK Models

Initial predictions of risk-specific exposure concentrations from a human PBPK model used metabolic parameters from Haddad *et al.* (2001), two exposure scenarios, and two methods of risk estimation. The exposure scenarios utilized were an occupational-like time of exposure (8.0 hr exposure/day x 5 d/week; 7 days simulation) and a continuous environmental time of exposure (24 hr/d x 7d/week; 10 days simulation). Two methods of risk estimation were used. In method I a human potency value, P_{human}, was used to estimate an internal dose equivalent to 1 x 10^{-6} lifetime theoretical risk (e.g., 10^{-6} risk/0.0087 $(mg/kg`-d)^{-1}$ = 1.15 x 10^{-4} mg/kg-d.) The human PBPK model with differing exposure scenarios was then used to estimate the external ethylbenzene concentrations resulting in that internal dose. In method II the animal LED_{10} was divided by 10^5 to obtain the 10^{-6} risk specific dose and the equivalent external concentration was adjusted for possible pharmacodynamic (PD) differences between rats and humans (i.e., $(70/0.45)^{1/8}$). For the tumor site of male rat kidney the 1 x 10^{-6} values from the human models vary by 2-fold (0.48 to 0.79 ppb; Table 9). The same analysis was repeated with the human metabolic parameters from Sams *et al*. (2004) and the range was similar (0.33 to 0.74 ppb). PBPK models with higher body weight of 90 kg and 40% body fat gave only slightly higher ppb predictions. According to the discussion above, the preferred value for the unit risk of ethylbenzene is 2.5 x 10^{-6} $(\mu g/m^3)^{-1}$, based on the data for male rat kidney tumors. With the human model, unit risk estimates ranged from 1.27 x 10^{-6} to 3.06 x 10^{-6} ppb^{-1} (2.9 x 10^{-7} to 7.0 x 10^{-7} $[\mu g/m^3]^{-1}$ at 4.35 $\mu g/m^3$/ppb) or somewhat lower than the animal PBPK based values. These unit risk estimates from the human PBPK

models were not used as final values due to issues of tumor site concordance and human variability and parameter uncertainty.

Table 9. Estimates of Exposure Levels (ppb) for 10^{-6} Theoretical Lifetime Cancer Risk, based on Human PBPK Modeling[a]

Method/Model	Occupational Scenario	Environmental Scenario
I . Human Potency based		
70 kg human 20% fat Haddad	0.70	0.50
20% fat Sams	0.66	0.33
90 kg human 40% fat Haddad	0.79	0.56
40% fat Sams	0.74	0.34
II. Animal LED_{10} based		
70 kg human 20% fat Haddad	0.68	0.48
20% fat Sams	0.64	0.32
90 kg human 40% fat Haddad	0.74	0.53
40% fat Sams	0.69	0.34

[a] Note: Values are calculated for 1 x 10^{-6} theoretical lifetime cancer risk. Occupational scenario was 8.0 hr/d x 5 days/week, for one-week simulations; environmental scenario was continuous exposure for one week. Method I used the human potency (Ph) in $(mg/kg\text{-}d)^{-1}$ to calculate a 10^{-6} risk internal dose in metrics of ethylbenzene metabolized by the liver (AMET, μmol/d). Method II uses the animal LED_{10} to calculate a 10^{-6} risk dose. The human models were the 70 kg default with 20% fat and a 90 kg variant with 40% fat (and comparatively less muscle). The Ph was based on the male rat kidney tumors of 0.0087 $(mg/kg\text{-}d)^{-1}$. Inhalation was 20 m^3/d. The models were run with metabolic parameters from Haddad *et al*. (2001) and Sams *et al*. (2004).

Conclusion

The male rat was the most sensitive sex and species tested by NTP (1999) in the inhalation carcinogenesis studies of ethylbenzene. While the highest potency and unit risk values were obtained for rat testicular adenomas, the high background rate of this common tumor made interpretation difficult. NTP considered the increased incidences of renal tubule carcinoma or adenoma to provide clear evidence of the carcinogenic activity of ethylbenzene, and this site was considered to be the more reliable basis for estimating human cancer potency.

Using either the LMS or BMD methodology with different dose metrics, the 95% upper confidence bound on the unit risk value for purposes of calculating cancer risks associated with exposure to ethylbenzene is in the range 4.0×10^{-4} to 6.6×10^{-3} $(mg/m^3)^{-1}$, based on the incidence data from the NTP (1999) studies (Table 10). The unit risk value of 2.5×10^{-3} $(mg/m^3)^{-1}$, or 2.5×10^{-6} $(\mu g/m^3)^{-1}$, based on the renal tubule carcinoma or adenoma incidence data in male rats and using the LMS methodology applied to LTWA doses, is considered the most appropriate for purposes of calculating cancer risks associated with exposure to low levels of ethylbenzene. As noted above and summarized in Table 10 below, unit risks based on the PBPK internal doses were not markedly different than those based on the LTWA doses, and involved a number of assumptions. Because the PBPK modeling is uncertain and the results were relatively insensitive to the approach used, the LMS results based on the LTWA doses were selected as most appropriate. The inhalation cancer potency, from which the unit risk value was derived, is 0.0087 $(mg/kg\text{-}d)^{-1}$. The oral cancer potency value of 0.011 $(mg/kg\text{-}d)^{-1}$ is derived from the inhalation potency value by multiplying by the ratio of the uptake values (i.e., 1/0.77). The inhalation and oral cancer potency values are considered applicable to low dose ethylbenzene exposures.

Table 10. Comparison of unit risk values for ethylbenzene

Species/sex/tumor site	Unit Risk value $(mg/m^3)^{-1}$			
	LTWA doses, LMS approach	**LTWA doses, BMD approach**	**PBPK doses, LMS approach**	**PBPK doses, BMD approach**
Male rat kidney	0.0025	0.0026	0.0018	0.0018
Male rat testicular	0.0066	0.0063	0.0066	0.0019
Female rat kidney	0.00063	0.00054	0.00040	0.00064
Male mouse lung	0.0015	0.0015	0.0021	0.0020
Female mouse liver	0.0017	0.0017	0.0015	0.0015

VII. REFERENCES

Agency for Toxic Substances and Disease Registry (ATSDR), 1999. Toxicological Profile For Ethylbenzene. PB/99/166647. U.S. Department of Health and Human Services, Public Health Service. ATSDR, Atlanta, GA. Available at: http://www.atsdr.cdc.gov/toxprofiles/tp110-p.pdf.

Armitage P and Doll R, 1954. The age distribution of cancer and a multistage theory of carcinogenesis. Br J Cancer 8:1-12.

Backes WL. Sequeira DJ, Cawley GF and Eyer CS, 1993. Relationship between hydrocarbon structure and induction of P450: effects on protein levels and enzyme activities. Xenobiotica 23: 1353-1366.

Bardodej Z and Bardodejova E, 1970.. Biotransformation of ethylbenzene, styrene, and alpha-methylstyrene in man. Am Ind Hyg Assoc J 31:206-209.

Bergeron RM, Desai K, Serron SC, Cawley GF, Eyer CS and Backes WL, 1999. Changes in the expression of cytochrome P450s 2B1, 2B2, 2E1, and 2C11 in response to daily aromatic hydrocarbon treatment. Toxicol Appl Pharmacol 157: 1-8.

California Department of Health Services (CDHS), 1985. Guidelines for Chemical Carcinogen Risk Assessment and Their Scientific Rationale. California Department of Health Services, Health and Welfare Agency, Sacramento, CA.

Chan PC, Haseman JK, Mahler J and Aranyi C, 1998. Tumor induction in F344/N rats and B6C3F$_1$ mice following inhalation exposure to ethylbenzene. Toxicol Lett 99:23-32.

Charest-Tardif G, Tardif R, and Krishnan K, 2006. Inhalation pharmacokinetics of ethylbenzene in B6C3F1 mice. Toxicol Appl Pharmacol 210:63-69.

Crouch E, 1992. MSTAGE (Version 1.1). E.A.C. Crouch, Cambridge Environmental Inc., 58 Buena Vista Road, Arlington, Massachusetts 02141.

Dean BJ, Brooks TM, Hodson-Walker G and Hutson DH, 1985. Genetic toxicology testing of 41 industrial chemicals. Mutat Res 153:57-77.

Elovaara E, Engstrom K, Nickels J, Aito A, and Vainio H, 1985. Biochemical and morphological effects of long-term inhalation exposure of rats to ethylbenzene. Xenobiotica 15(4):299-308.

Engstrom KM, 1984. Metabolism of inhaled ethylbenzene in rats. Scand J Work Environ Health 10:83-87.

Engstrom KM, Riihimaki V and Laine A, 1984. Urinary disposition of ethylbenzene and m-xylene in man following separate and combined exposure. Int Arch Occup Environ Health 54:355-363.

Fishbein L, 1985. An overview of environmental and toxicological aspects of aromatic hydrocarbons. IV. Ethylbenzene. Sci Tot Environ 44:269-287.

Florin I, Rutberg L, Curvall M and Enzell CR, 1980. Screening of tobacco smoke constituents for mutagenicity using the Ames' test. Toxicology 15:219-232.

Gaylor DW, Kodell RL, Chen JJ, Springer JA, Lorentzen RJ and Scheuplein RJ, 1994. Point estimates of cancer risk at low doses. Risk Anal 14:843–850.

Gromiec Jp and Piotrowski JK, 1984. Urinary mandelic acid as an exposure test for ethylbenzene. Int Arch Occup Environ Health 55: 61-72.

Haddad S, Beliveau M, Tardif R and Krishnan K, 2001, A PBPK modeling-based approach to account for interactions in the health risk assessment of chemical mixtures. Toxicol Sci 63:125-131.

Hard GC, 2002. Significance of the renal effects of ethyl benzene in rodents for assessing human carcinogenic risk. Toxicol Sci 69:30-41.

Hazardous Substances Data Bank (HSDB), 2003. National Library of Medicine, Bethesda, MD Available online at http://sis.nlm.nih.gov. Last revision date for ethylbenzene summary listed as 03/05/2003.

Hirakawa K, Oikawa S, Hiraku Y, Hirosawa I, Kawanishi S, 2002. Catechol and hydroquinone have different redox properties responsible for their differential DNA-damaging ability. Chem Res Toxicol 15:76-82.

Holz O, Scherer G, Brodtmeier S, Koops F, Warncke K, Krause T, Austen A, Angerer J, Tricker AR, Adlkofer F *et al*., 1995. Determination of low level exposure to volatile aromatic hydrocarbons and genotoxic effects in workers at a styrene plant. Occup Environ Med 52:420-428.

International Agency for Research on Cancer (IARC), 2000. Monographs on the Evaluation of Carcinogenic Risks to Humans. Some Industrial Chemicals. Vol. 77, p. 227-266. IARC, Lyon, France.

Johanson G and Filser JG, 1992. Experimental data from closed chamber gas uptake studies in rodents suggest lower uptake rate of chemical than calculated from literature values on alveolar ventilation. Arch Toxicol 66: 291-295.

Kohn MC, and Melnick RL, 2000. The privileged access model of 1,3-butadiene disposition. Environ Health Perspect 108: (Suppl 5) 911-917.

Maltoni C, Conti B, Giuliano C and Belpoggi F, 1985. Experimental studies on benzene carcinogenicity at the Bologna Institute of Oncology: Current results and ongoing research. Am J Ind Med 7:415-446.

Maltoni C, Ciliberti A, Pinto C, Soffritti M, Belpoggi F and Menarini L, 1997. Results of long-term experimental carcinogenicity studies of the effects of gasoline, correlated fuels, and major gasoline aromatics on rats. Annals NY Acad Sci 837:15-52.

McGregor DB, Brown A, Cattanach P, Edwards I, McBride D, Riach C and Caspary WJ, 1988. Responses of the L5178Y tk+/tk- mouse lymphoma cell forward mutation assay: III. 72 coded chemicals. Environ Mol Mutagen 12:85-154.

Medinsky MA, Leavens TL, Csanady GA, Gargas ML, and Bond JA, 1994. In vivo metabolism of butadiene by mice and rats: a comparison of physiological model predictions and experimental data. Carcinogenesis 15:1329-1340.

Midorikawa K, Uchida T, Okamoto Y, Toda C, Sakai Y, Ueda K, Hiraku Y, Murata M, Kawanishi S, Kojima N, 2004. Metabolic activation of carcinogenic ethylbenzene leads to oxidative DNA damage. Chem-Biol Interact 150:271-281.

Mohtashamipur E, Norpoth K, Woelke U and Huber P, 1985. Effects of ethylbenzene, toluene, and xylene on the induction of micronuclei in bone marrow polychromatic erythrocytes of mice. Arch Toxicol 58: 106-109.

National Toxicology Program (NTP), 1986. Toxicology and Carcinogenesis Studies of Xylenes (Mixed) (60% m-xylene, 14% p-xylene, 9% o-xylene, and 17% ethylbenzene) (CAS No. 1330-20-7) in F344/N Rats and B6C3F$_1$ Mice (Gavage Studies). NTP Technical Report Series No. 327. NIH Publication No. 87-2583. U.S. Department of Health and Human Services, Public Health Service, National Institutes of Health. NTP, Research Triangle Park, NC.

National Toxicology Program (NTP), 1999.. Toxicology and Carcinogenesis Studies of Ethylbenzene (CAS No. 100-41-4) in F344/N Rats and in B6C3F$_1$ Mice (Inhalation Studies). Technical Report Series No. 466. NIH Publication No. 99-3956. U.S. Department of Health and Human Services, Public Health Service, National Institutes of Health. NTP, Research Triangle Park, NC.

Nestmann ER and Lee EG, 1983. Mutagenicity of constituents of pulp and paper mill effluent in growing cells of *Saccharomyces cerevisiae*. Mutat Res 119:273-280.

Nestmann ER, Lee EG, Matula TI, Douglas GR and Mueller JC, 1980. Mutagenicity of constituents identified in pulp and paper mill effluents using the Salmonella/mammalian-microsome assay. Mutat Res 79:203-212.

Norppa H and Vainio H, 1983. Induction of sister-chromatid exchanges by styrene analogues in cultured human lymphocytes. Mutat Res 116:379-387.

Sams C, Loizou GD, Cocker J and Lennard MS, 2004. Metabolism of ethylbenzene by human liver microsomes and recombinant human cytochrome P450s (CYP). Toxicol Lett 147:253-260.

Seely JC, Haseman JK, Nyska A, Wolf DC, Everitt JI and Hailey JR, 2002. The effect of chronic progressive nephropathy on the incidence of renal tubule cell neoplasms in control male F344 rats. Toxicol Pathol 30(6):681-686.

Serron SC, Dwivedi N and Backes WL, 2000. Ethylbenzene induces microsomal oxygen free radical generation: antibody-directed characterization of the responsible cytochrome P450 enzymes. Toxicol Appl Pharmacol 164: 305-311.

Sram RJ, Beskid O, Binkova B, Rossner P and Smerhovsky Z, 2004. Cytogenetic analysis using fluorescence in situ hybridization (FISH) to evaluate occupational exposure to carcinogens. Toxicol Lett 149:335-344.

Stott WT, Johnson KA, Bahnemann R, Day SJ and McGuirk RJ, 2003. Evaluation of potential modes of action of inhaled ethylbenzene in rats and mice. Toxicol Sci 71:53-66.0

Tardif R, Charest-Tardif G, Brodeur J and Krishnan K, 1997. Physiologically based pharmacokinetic modeling of a ternary mixture of alkyl benzenes in rats and humans. Toxicol Appl Pharmacol 144:120-143.

Toda C, Uchida T, Midorikawa K, Murata M, Hiraku Y, Okamoto Y, Ueda K, Kojima N and Kawanishi S, 2003. DNA damage by ethylbenzenehydroperoxide formed from carcinogenic ethylbenzene by sunlight irradiation. Biochem Biophys Res Commun 304:638-642.

U.S. Environmental Protection Agency (U.S. EPA), 2000. Benchmark Dose Technical Guidance Document. (External Review Draft, October, 2000). Risk Assessment Forum, Washington, DC, 87 pp.

U.S. Environmental Protection Agency (U.S. EPA), 2003. Draft final guidelines for Carcinogen Risk Assessment (External Review Draft, February 2003). NCEA-F-0644A. 03 Mar 2003. U.S. Environmental Protection Agency, Risk Assessment Forum, Washington, DC, 125 pp.

Watanabe K, Bois FY and Zeise L, 1992. Interspecies extrapolation: A reexamination of acute toxicity data. Risk Anal 12:301-310.

Appendix

Berkeley Madonna Model Code Example (Male Rat 75 ppm x 6.25 hr/d x 5days/week, 1 week simulation. If cut and pasted into BM demo program available online this model will run)

```
METHOD Stiff

STARTTIME = 0
STOPTIME= 168
DT = 0.001

{ethylbenzene moles}
init Af = 0
Limit Af >= 0
init Al = 0
Limit Al >= 0
init Am = 0
Limit Am >= 0
init Avrg = 0
Limit Avrg >= 0
init Alu = 0
Limit Alu >= 0

{moles  metabolized}
init Ametl = 0
init Ametlg = 0

{tissue flows L/hr}
Qtot = 15*BW^0.7
Qalv = 15*BW^0.7
Qf = 0.09*Qtot
Qvrg = 0.51*Qtot
Ql = 0.25*Qtot
Qm = 0.15*Qtot
Qlu = Qtot

{tissue volumes L}
Vf = 0.09*BW
Vl = 0.049*BW
Vm = 0.72*BW
Vvrg = 0.036*BW
Vlu = 0.014*BW
BW = 0.45

{blood/air and tissue/blood partition coefficients, unitless}
Pb = 28.0
Pl = 2.99
Pf = 55.57
Pm = 0.93
Pvrg = 1.41
Plu = 2.15
```

```
{ethylbenzene metabolic parameters, CLh, Vmax mol/hr, Km, M}
VmaxC = 6.39
Vmax = VmaxC*BW^0.75/(1000*106.16)
Km = 1.04/(1000*106.16)
{exposure in ppm converted to moles/L}
Cair = IF TIME <= 6.25 THEN 75*(1E-6/25.45) ELSE IF (24<TIME) AND (TIME <= 30.25) THEN
75*(1E-6/25.45) ELSE IF (48<TIME) AND (TIME <= 54.25) THEN 75*(1E-6/25.45) ELSE IF
(72<TIME) AND (TIME <= 78.25) THEN 75*(1E-6/25.45) ELSE IF (96<TIME) AND (TIME <=
102.25) THEN 75*(1E-6/25.45) ELSE 0

{calculated concentrations of ethylbenzene}
Cart = Pb*(Qalv*Cair + Qtot*Cvtot)/(Pb*Qtot + Qalv)
Cvf = Af/(Vf*Pf)
Cvl = Al/(Vl*Pl)
Cvvrg = Avrg/(Vvrg*Pvrg)
Cvm = Am/(Vm*Pm)
Cvlu = Alu/(Vlu*Plu)
Cvtot = (Ql*Cvl + Qf*Cvf + Qm*Cvm + Qvrg*Cvvrg)/Qtot
Cexh = Cart/Pb
Tmass = Ametl + Alu + Al + Af + Am + Avrg

{differential equations for ethylbenzene uptake and metabolism}
d/dt(Alu) = Qtot*(Cvtot - Cvlu)
d/dt(Al) = Ql*(Cart - Cvl)  - Vmax*Cvl/(Km + Cvl)
d/dt(Af) = Qf*(Cart - Cvf)
d/dt(Avrg) = Qvrg*(Cart - Cvvrg)
d/dt(Am) = Qm*(Cart - Cvm)

{amount of ethylbenzene metabolized}
d/dt(Ametl)  = Vmax*Cvl/(Km + Cvl)
d/dt(Ametlg) = (Vmax*Cvl/(Km + Cvl))/BW
init AUCvtot = 0
init AUCvl = 0
d/dt(AUCvtot) = Cvtot
d/dt(AUCvl) =  Cvl
```